SF32LB56x

Datasheet

V1.9.4

DS5601-SF32LB56x-EN

SiFli Technologies (Nanjing) Co., Ltd.
www.sifli.com
Copyright ©2026

Revision History

Document Status

Document Status	Version Range	Description
Draft	0.0.0 ~0.9.9	Initial draft, informal release. The information is preliminary data, reflecting the specifications and performance of the product before mass production. No warranty is made as to the accuracy and the content is subject to change at any time without notice.
Release	1.0.0 ~1.9.9	Official release, and minor amendments might be made to the information to more accurately reflect the specifications and performance of mass-produced products; SiFli reserves the right to make changes to the document at any time without notice.

Revision History

Date	Version	Release Notes
2026-09-10	1.9.4	Updated Bluetooth to version 6.3, update block diagram
2026-06-08	1.9.3	Updated Figure 0-1 Function Block Diagram
2025-04-01	1.9.2	Added I/O characteristics table
2025-03-10	1.9.1	Updated the data bit width description that SPI can support
2024-10-31	1.9	Added information about model SF32LB566
2024-08-05	1.8	Updated unit in Table 4-11
2024-07-25	1.7	Updated DPI/RGB and maximum resolution information
2024-05-15	1.6	Updated GPADC specification
2024-03-06	1.5	Added IO drive strength information
2024-02-23	1.4	Adjusted table formats
2024-01-26	1.3	Updated Tstorage temperature range
2023-11-22	1.2	Updated Reliability data
2023-09-22	1.1	Modified “1MB QSPI NOR Flash” to “512KB/1MB QSPI NOR Flash”
2023-06-27	1.0	Added YUV
2023-03-13	0.9	Updated text details
2023-02-28	0.8	Updated power consumption and audio data
2023-02-16	0.7	Updated wireless connection data
2023-01-04	0.6	Updated peripheral details
2022-12-07	0.5	Updated Bluetooth RF data
2022-11-18	0.4	Added PSA Certified Level 1
2022-11-07	0.3	Added packaging information
2022-10-20	0.2	Updated PBR pin information
2022-09-20	0.1	Initial draft

©2026 SiFli Technologies (Nanjing) Co., Ltd. www.sifli.com

Overview

SF32LB56x is a family of highly integrated high-performance MCUs desgined for ultra-low power Artifical Intelligence of Things (AIoT) scenarios. SF32LB56x adopts the big.LITTLE architecture with Arm Cortex-M33 STAR-MC1 processors, and is embedded with 2D/2.5D GPU, neural network matrix accelerator, dual-mode BT6.3, and audio Codec. SF32LB56x can be used for a wide variety of applications such as wearables, smart HMI devices, and smart homes.

The high-performance processor ("big core") of SF32LB56x can operate at up to 240MHz for 984 CoreMark. The low-power processor ("LITTLE core") can operate at up to 96MHz for 394 CoreMark and serves as both sensor hub and Bluetooth controller at high energy efficiency of 3.3uA/CoreMark. This architecture delivers no-compromise user experience of both high computational performance required for feature-rich graphical HMI and always-on ultra-low power sensor control and wireless connectivity.

The 2D/2.5D GPU, at up to 240MHz, support 4-layer alpha blending, hardware accelerated rotation and scaling, and conversion of various common graphic formats. eZip™2.0 supports lossless compressed graphics file, saving memory bandwidth and storage capacity. The LCD controller can support interfaces of 8080/QSPI/JDI at a full-screen refresh frame rate up to 60fps, and support Always-On Display.

The dual-mode BT6.3 transceiver has a maximum Tx power of 13dBm at EDR2 mode and Rx power of 2.2mA@3.3V, and the sensitivity reaches -100dBm (1Mbps) for BLE and -95.5dBm for EDR2. SF32LB56x is embedded with high-fidelity audio ADC/DAC, supporting Bluetooth call and connecting headphones for MP3 playback.

Functional Block Diagram

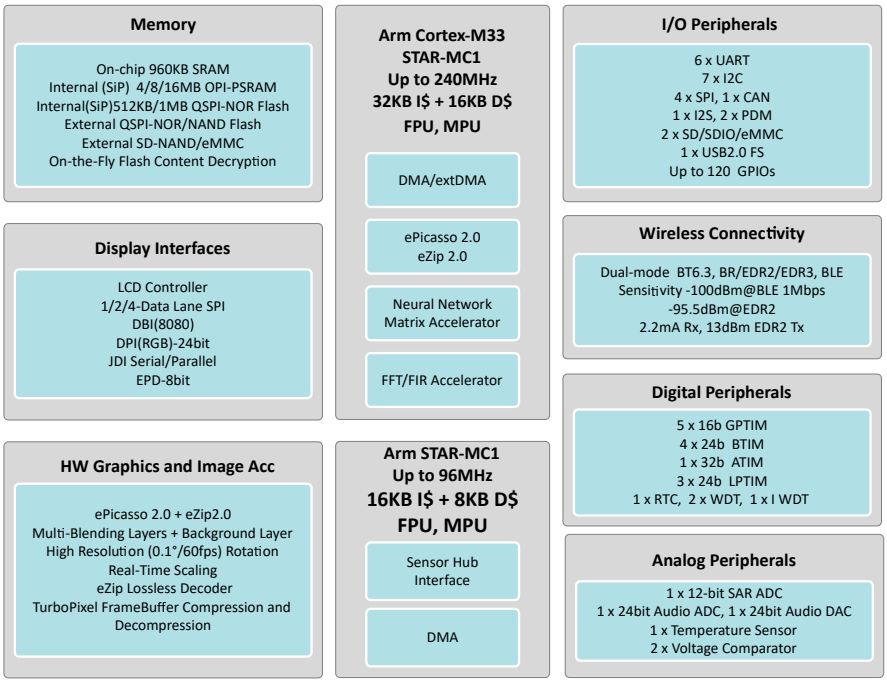

Figure 0-1: Functional Block Diagram

©2026 SiFli Technologies (Nanjing) Co., Ltd. www.sifli.com

Features

CPU and Memory

- High Performance Processor (HCPU)
  - Arm Cortex-M33 STAR-MC1
  - Up to 240MHz clock frequency, adjustable
  - Up to 370DMIPS, 984 EEMBC CoreMark
  - I/D-Cache: 32KB(2-way)+16KB(4-way)
  - SRAM: 800KB (128KB Retention SRAM)
  - CoreMark power: <34uA/MHz @3.3V
  - Floating Point Unit (FPU)
  - Memory Protection Unit (MPU)
- Ultra Low-Power Processor (LCPU)
  - Arm Cortex-M33 STAR-MC1
  - Up to 96MHz clock frequency, adjustable
  - Up to 148DMIPS, 394 EEMBC CoreMark
  - I/D-Cache: 16KB (2-way)+8KB (4-way)
  - SRAM: 160KB (all Retention SRAM)
  - CoreMark power: <13.5uA/MHz @3.3V
  - Floating Point Unit (FPU)
  - Memory Protection Unit (MPU)

Wireless Connectivity

- Dual-mode BT6.3, with BLE Audio support
- Sensitivity: -100dBm(BLE/1Mbps), -96.3dBm(BR), -95.5dBm(EDR2), -88.5dBm(EDR3)
- Max. Tx power: 13dBm(EDR2/3), 19dBm(BR/BLE)
- Rx peak current (BR): 2.2mA@3.3V

Graphics and Display

- 2D/2.5D GPU—ePicasso™2.0
  - 4-layer alpha blending + 1 background layer
  - Hardware-accelerated rotation, scaling, mirroring
  - Maximum resolution: 1024×1024
  - Support aRGB8565, aRGB8888, L8, A8/4, YUV
- Lossless Decompression Accelerator – eZip™2.0
  - Lossless graphics decompression, support native animation eZip-A
  - Support aRGB8565, aRGB8888, L8, A8/4
  - Concatenated operation with ePicasso™2.0
- LCD Controller
  - Support 8080, SPI, Dual-SPI, Quad-SPI, DPI/RGB, JDI
  - 2-layer alpha blending + 1 background layer
  - TurboPixel™ Frame Buffer compression and decompression

Audio

- 1×HiFi 24-bit Audio DAC
  - Sample rate: 8k/ 16k/ 11.025k/ 22.05k/ 24k/ 32k/ 44.1k/ 48kHz
  - SNR(with 10kOhm load and A-Weighted): 109dB
  - THD+N: -99dB, Dynamic Range: 109dB
  - Noise Floor: 3.3 μVrms
- 1×HiFi 24-bit Audio ADC
  - Sample rate: 8k/ 11.025k/ 12k/ 16k/ 22.05k/ 24k/ 32k/ 44.1k/ 48kHz
  - SNR(A-Weighted): 99dB
  - THD+N: -80dB, Dynamic Range: 99dB
- 2×PDM
- 1×I^2S
- Audio sample rate conversion accelerator
- Audio equalizer

Neural Network Matrix Accelerator

- Matrix convolution acceleration for TinyML scenarios
- Processing power up to 1.92GOPS
- Energy efficiency higher than 10TOPS/W

Hardware-Accelerated Digital Signal Processing

- One FFT accelerator in big core
- One FIR filter accelerator in big core
- One CORDIC trigonometric function co-processor for each processor

Memory Interface

- 4×MPI (QSPI), support QSPI-NOR, SPI-NAND, QPI/OPI-PSRAM
- 2×SD/SDIO/eMMC, one 4-bit and one 8-bit, support SD3.0, SDIO3.0 and eMMC4.51

System Clock

- Oscillator
  - 48MHz crystal oscillator
  - Low power RC oscillator: 1MHz, 48MHz

©2026 SiFli Technologies (Nanjing) Co., Ltd. www.sifli.com

  - Ultra-low powr RC oscillator: 10KHz
  - Ultra-low powr 32.768KHz crystal oscillator, optional
- PLL
  - Dedicated audio PLL
  - 3×PLL, Max. frequency 384MHz, in 24MHz steps

Security

- AES, HASH and CRC hardware accelerator
- True Random Number Generator (TRNG)
- Secure Boot
- 1024-bit eFuse to store Root of Trust and UID
- PSA Certified Level 1

Others

- DMA
  - General DMA: high efficiency data transfer between internal memory and peripherals
  - extDMA: high efficiency data transfer between internal memory and external memory
- Timers
  - 5×16b GPTIM, 1×32b ATIM, 4×32b BTIM, 3×24b LPTIM
  - 1×RTC
  - 2×24b WDT, 1×IWDT
- Analog Peripherals
  - 1×12-bit general purpose SAR ADC, 8 channels
  - 1×Temperature sensor
  - 2×Low power voltage comparator
- I/O Peripherals
  - 6×UART, 7× I^2C, 4×SPI, 1×ISO7816
  - 1×USB2.0 FS
  - SIM card controller
  - Peripheral Task Controller (PTC)
- Power Management
  - Power supply: 1.7 to 3.6V, -40 to 85°C
  - High-efficiency buck and low-power LDO
  - Sleep current with RTC wake-up: 600nA
  - Sleep current with pin wake-up: 300nA

Package

- WBBGA175, 120 GPIOs, 6.5×6.1×0.94mm
- QFN68L, 44 GPIOs, 7×7×0.75mm

©2026 SiFli Technologies (Nanjing) Co., Ltd. www.sifli.com

Applications

Smart Wearable

- High-end smart watch
- Smart wristband
- Wearable medical device
- Fitness equipment

Industrial Device

- Cost-effective display solution
- Graphical Human-Machine Interface (HMI) device
- Industrial sensor hub
- Industrial equipment monitoring
- Industrial instrumentation

Vehicle Device

- Electric vehicle control center
- Car key
- Wearable car remote controls

Home Automation

- Smart home appliance
- Smart door lock

Generic Scenario

- Low-power sensor hub
- Bluetooth mesh

©2026 SiFli Technologies (Nanjing) Co., Ltd. www.sifli.com

Contents

©2026 SiFli Technologies (Nanjing) Co., Ltd. www.sifli.com

List of Figures

©2026 SiFli Technologies (Nanjing) Co., Ltd. www.sifli.com

List of Tables

©2026 SiFli Technologies (Nanjing) Co., Ltd. www.sifli.com

1 Introduction

1.1 System Architecture

SF32LB56x is a family of highly integrated high-performance MCUs desgined for ultra-low-power Artifical Intelligence of Things (AIoT) scenarios. SF32LB56x adopts the big.LITTLE architecture with the Arm Cortex-M33 STAR-MC1 processor.

- High-Performance Processor/Big Core (HCPU): Up to 240MHz clock frequency, 32KB instruction cache (I-Cache) and 16KB data cache (D-Cache), 800KB SRAM (128KB Retention SRAM); As the system master, it can efficiently access on-chip and off-chip storage. It is mainly used for system control, Human-Machine Interaction, and high-performance computing.
- Ultra-low Power Processor/LITTLE Core (LCPU): Up to 96MHz clock frequency, 16KB instruction cache (I-Cache) and 8KB data cache (D-Cache), 160KB SRAM (all Retention SRAM); it is mainly used as the system's ultra-low power sensor hub and Bluetooth Low Energy connection controller to meet various data acquisition, processing, transmission and control requirements in ultra-low power scenarios.

1.2 Cortex-M33 STAR-MC1 Processor

Cortex-M33 STAR-MC1 processor is the first processor of the "Star" series from Arm China. It has the key features of Cortex-M33, supporting the full functionality of the existing Arm v8-M architecture, and with an in-order three-stage pipeline, it can significantly reduce the power consumption of the system. It also has partial dual-issue 16-bit instruction capability, and the coprocessor interface is further improved to support the Cache.

With the performance reaching 1.5DMIPS/MHz and 4.02Coremark/MHz, Cortex-M33 STAR-MC1 delivers a 20% performance improvement over previous-generation Arm processors at the same clock speed.

Cortex-M33 STAR-MC1 has a coprocessor interface which can further enhance the capability of customized calculation to meet the requirements of different scenarios. The MCR (Move from Coprocessor to Register) and MRC (Move from Register to Coprocessor) instructions enable the transfer of register data and computation results between Cortex-M33 STAR-MC1 and the coprocessor, making it ideal for operations with small data volumes, complex calculations but relatively fragmented and low latency. While the coprocessor computes, Cortex-M33 STAR-MC1 processor can still execute other instructions in parallel, thus significantly improving execution efficiency.

In addition, the processor supports Digital Signal Processing (DSP) instruction sets and Floating Point Unit (FPU).

Tightly Coupled Memory (TCM) and Cache technologies are adopted in Cortex-M33 STAR-MC1 processor to enhance flexibility in the use of internal and external memory systems with different characteristics, ensuring the real-time response and computational efficiency of the processor in a variety of scenarios.

©2026 SiFli Technologies (Nanjing) Co., Ltd. www.sifli.com

1.3 High-Performance Processor (Big Core) System (HPSYS)

1.3.1 Bus Architecture

The HPSYS provides an internal bus matrix based on the AHB protocol, which supports multiple master devices to access the address spaces of multiple slave devices in parallel.

As shown in Figure **??**, the master devices of the bus are located on the top side and the address spaces of the slave devices are located on the right side, and the black dots at the intersection represent bus connectivity.

HCPU can access all address spaces of HPSYS, and can access all address spaces of LPSYS through HP2LP.

DMAC1 can access all address spaces of HPSYS, and can access all address spaces of LPSYS through HP2LP.

Some master devices of LPSYS can access the address spaces of HPSYS through LP2HP.

HPSYS_ITCM can only be accessed by HCPU and DMAC1. DTCM shares 128KB address spaces with HPSYS_RAM0, and can be accessed by HCPU and other master devices.

When multiple master devices access the address space of the same slave device at the same time, the access order will be determined based on the polling arbitration principle.

As shown in the figure, when multiple master devices with unconnected borders access the address spaces of different slave devices at the same time, they will not be affected by each other. When two master devices with connected borders initiate access at the same time, the access order will be decided based on the polling arbitration principle.

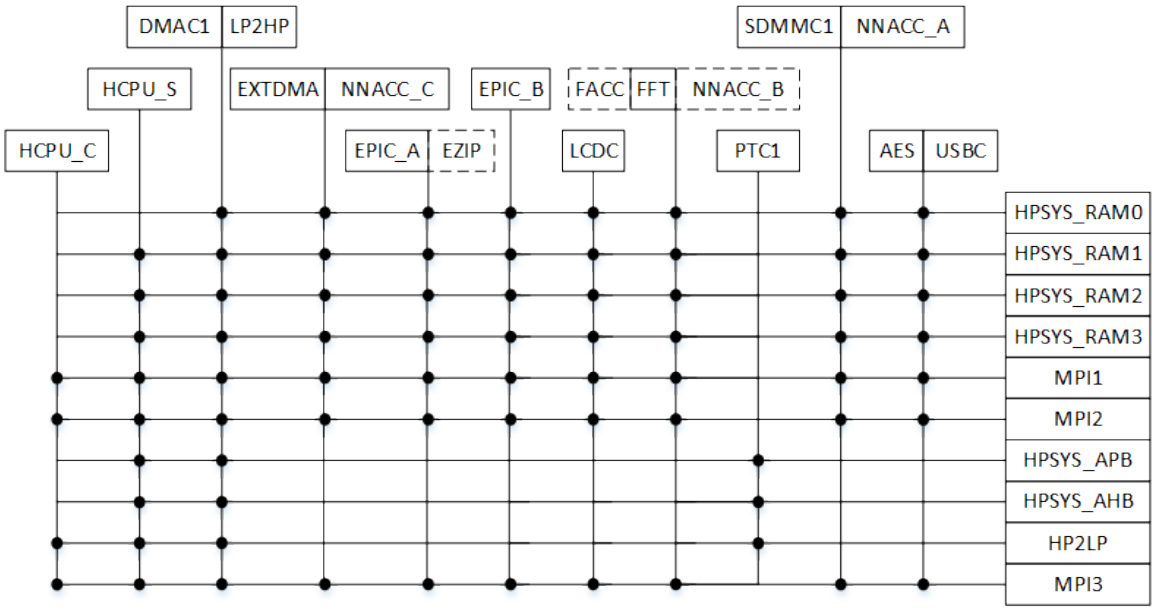

Figure 1-1: Bus Architecture of HPSYS

©2026 SiFli Technologies (Nanjing) Co., Ltd. www.sifli.com

1.3.2 Clock Architecture

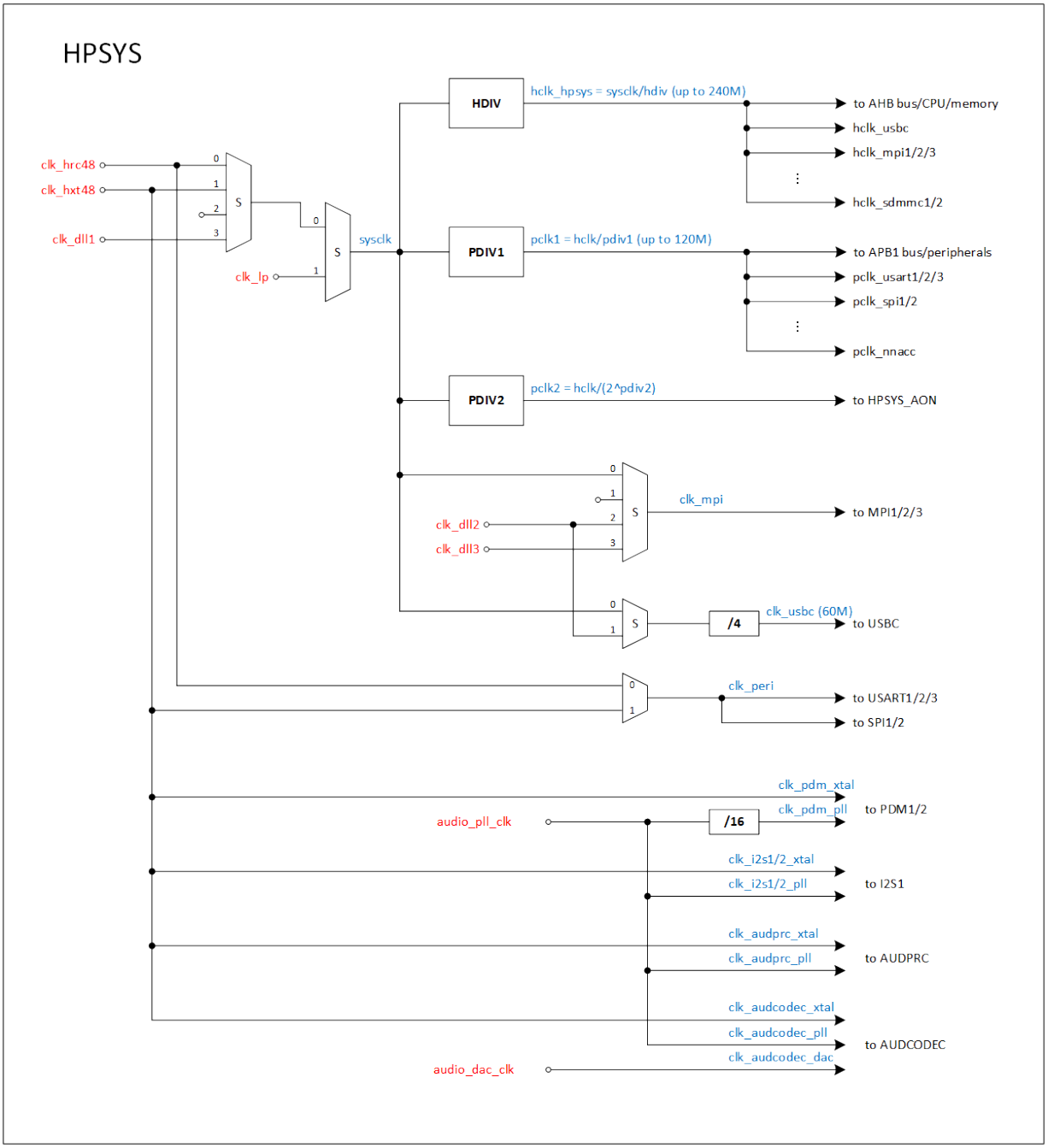

Figure 1-2: Clock Architecture of HPSYS

©2026 SiFli Technologies (Nanjing) Co., Ltd. www.sifli.com

1.3.3 Memory Type

1.3.3.1 Cache

HCPU has 32KB 2-way I-Cache (Level 1 instruction cache) and 16KB 4-way D-Cache (Level 1 data cache), which can greatly improve CPU execution efficiency during XIP. The MPU (Memory Protection Unit) should be configured appropriately to set the cache address segment and non-cache address segment to balance efficiency and ease of use.

1.3.3.2 TCM

HCPU has 128KB zero-wait-cycle D-TCM with address space 0x2000_0000-0x2001_FFFF, which can be used to place codes and data with high real-time requirements. This TCM memory is connected to the bus and can be accessed by other AHB masters. This memory can holds data while the system is in low-power mode.

1.3.3.3 SRAM

There is a total of 800KB SRAM on the HPSYS bus, which includes:

- 0x2000_0000-0x2001_FFFF, 128KB zero-wait-cycle SRAM (shared with D-TCM), accessible to all AHB masters. Maximum frequency is 240MHz and has retention function.
- 0x2002_0000-0x200C_7FFF, 672KB zero-wait-cycle SRAM, accessible to all AHB masters. Maximum frequency is 240MHz.

1.3.3.4 Off-chip RAM

HPSYS supports external OPI DDR pSRAM with address space 0x6000_0000 - 0x61FF_FFFF, the actual accessible address is determined by the capacity of the external particles. The maximum interface frequency is DDR 144MHz and the data bit width is 8-bit.

1.3.3.5 Off-chip Flash

HPSYS supports external NOR/NAND FLASHs, in which

- 0x6000_0000–0x63FF_FFFF address segment can be combined with FLASH, recommended frequency is 96MHz
- 0x6400_0000–0x9FFF_FFFF address segment can be connected to external FLASH, recommended frequency is 72MHz

1.3.4 Address Mapping

Table 1-1: Address Mapping of HPSYS

Category	Memory /IP	Address Space	HCPU				LCPU	
			Starting Address		Ending Address		Starting Address	Ending Address
HPSYS_ITCM		**64KB**	**0x0000_0000**		**0x0000_FFFF**		**NA**	**NA**
	ROM	64KB	0x0000_0000		0x0000_FFFF		-	-
	Reserved	-	-		-		-	-
External Memory		**1024MB**	**0x1000_0000**	**0x6000_0000**	**0x1BFF_FFFF**	**0x9FFF_FFFF**	**0x6000_0000**	**0x9FFF_FFFF**
	MPI1 Memory	4MB	0x1000_0000	0x6000_0000	0x103F_FFFF	0x603F_FFFF	0x6000_0000	0x603F_FFFF
	MPI2 Memory	60MB	0x1040_0000	0x6040_0000	0x13FF_FFFF	0x63FF_FFFF	0x6040_0000	0x63FF_FFFF
	MPI3 Memory	128MB/960MB	0x1400_0000	0x6400_0000	0x1BFF_FFFF	0x9FFF_FFFF	0x6400_0000	0x9FFF_FFFF
HPSYS_RAM		**800KB**	**0x2000_0000**		**0x200C_7FFF**		**0x2A00_0000**	**0x2A0C_7FFF**
	RAM0 (Retention)	128KB	0x2000_0000		0x2001_FFFF		0x2A00_0000	0x2A01_FFFF
	RAM1	128KB	0x2002_0000		0x2003_FFFF		0x2A02_0000	0x2A03_FFFF
	RAM2	256KB	0x2004_0000		0x2007_FFFF		0x2A04_0000	0x2A07_FFFF
	RAM3	288KB	0x2008_0000		0x200C_7FFF		0x2A08_0000	0x2A0C_7FFF

Continued on the next page

©2026 SiFli Technologies (Nanjing) Co., Ltd. www.sifli.com

Table 1-1: Address Mapping of HPSYS (continued)

Category	Memory /IP	Address Space	HCPU		LCPU	
			Starting Address	Ending Address	Starting Address	Ending Address
HPSYS_APB1		**256KB**	**0x4000_0000**	**0x4003_FFFF**	**0x4000_0000**	**0x4003_FFFF**
	RCC1	4KB	0x4000_0000	0x4000_0FFF	0x4000_0000	0x4000_0FFF
	DMAC1	4KB	0x4000_1000	0x4000_1FFF	0x4000_1000	0x4000_1FFF
	MAILBOX1	4KB	0x4000_2000	0x4000_2FFF	0x4000_2000	0x4000_2FFF
	PINMUX1	4KB	0x4000_3000	0x4000_3FFF	0x4000_3000	0x4000_3FFF
	USART1	4KB	0x4000_4000	0x4000_4FFF	0x4000_4000	0x4000_4FFF
	USART2	4KB	0x4000_5000	0x4000_5FFF	0x4000_5000	0x4000_5FFF
	EZIP1	4KB	0x4000_6000	0x4000_6FFF	0x4000_6000	0x4000_6FFF
	EPIC	4KB	0x4000_7000	0x4000_7FFF	0x4000_7000	0x4000_7FFF
	LCDC1	4KB	0x4000_8000	0x4000_8FFF	0x4000_8000	0x4000_8FFF
	I2S1	4KB	0x4000_9000	0x4000_9FFF	0x4000_9000	0x4000_9FFF
	Reserved	4KB	0x4000_A000	0x4000_AFFF	0x4000_A000	0x4000_AFFF
	SYSCFG1	4KB	0x4000_B000	0x4000_BFFF	0x4000_B000	0x4000_BFFF
	EFUSEC	4KB	0x4000_C000	0x4000_CFFF	0x4000_C000	0x4000_CFFF
	AES	4KB	0x4000_D000	0x4000_DFFF	0x4000_D000	0x4000_DFFF
	Reserved	4KB	0x4000_E000	0x4000_EFFF	0x4000_E000	0x4000_EFFF
	TRNG	4KB	0x4000_F000	0x4000_FFFF	0x4000_F000	0x4000_FFFF
	GPTIM1	4KB	0x4001_0000	0x4001_0FFF	0x4001_0000	0x4001_0FFF
	GPTIM2	4KB	0x4001_1000	0x4001_1FFF	0x4001_1000	0x4001_1FFF
	BTIM1	4KB	0x4001_2000	0x4001_2FFF	0x4001_2000	0x4001_2FFF
	BTIM2	4KB	0x4001_3000	0x4001_3FFF	0x4001_3000	0x4001_3FFF
	WDT1	4KB	0x4001_4000	0x4001_4FFF	0x4001_4000	0x4001_4FFF
	SPI1	4KB	0x4001_5000	0x4001_5FFF	0x4001_5000	0x4001_5FFF
	SPI2	4KB	0x4001_6000	0x4001_6FFF	0x4001_6000	0x4001_6FFF
	EXTDMA	4KB	0x4001_7000	0x4001_7FFF	0x4001_7000	0x4001_7FFF
	Reserved	4KB	0x4001_8000	0x4001_8FFF	0x4001_8000	0x4001_8FFF
	NNACC1	4KB	0x4001_9000	0x4001_9FFF	0x4001_9000	0x4001_9FFF
	PDM1	4KB	0x4001_A000	0x4001_AFFF	0x4001_A000	0x4001_AFFF
	PDM2	4KB	0x4001_B000	0x4001_BFFF	0x4001_B000	0x4001_BFFF
	I2C1	4KB	0x4001_C000	0x4001_CFFF	0x4001_C000	0x4001_CFFF
	I2C2	4KB	0x4001_D000	0x4001_DFFF	0x4001_D000	0x4001_DFFF
	Reserved	4KB	0x4001_E000	0x4001_EFFF	0x4001_E000	0x4001_EFFF
	Reserved	4KB	0x4001_F000	0x4001_FFFF	0x4001_F000	0x4001_FFFF
	PTC1	4KB	0x4002_0000	0x4002_0FFF	0x4002_0000	0x4002_0FFF
	BUSMON1	4KB	0x4002_1000	0x4002_1FFF	0x4002_1000	0x4002_1FFF
	I2C3	4KB	0x4002_2000	0x4002_2FFF	0x4002_2000	0x4002_2FFF
	ATIM1	4KB	0x4002_3000	0x4002_3FFF	0x4002_3000	0x4002_3FFF
	Reserved	4KB	0x4002_4000	0x4002_4FFF	0x4002_4000	0x4002_4FFF
	AUDPRC	4KB	0x4002_5000	0x4002_5FFF	0x4002_5000	0x4002_5FFF
	AUDCODEC	4KB	0x4002_6000	0x4002_6FFF	0x4002_6000	0x4002_6FFF
	FFT1	4KB	0x4002_7000	0x4002_7FFF	0x4002_7000	0x4002_7FFF
	FACC1	4KB	0x4002_8000	0x4002_8FFF	0x4002_8000	0x4002_8FFF
	USART3	4KB	0x4002_9000	0x4002_9FFF	0x4002_9000	0x4002_9FFF
	Reserved	4KB	0x4002_A000	0x4002_AFFF	0x4002_A000	0x4002_AFFF
	CAN1	4KB	0x4002_B000	0x4002_BFFF	0x4002_B000	0x4002_BFFF
	Reserved	4KB	0x4002_C000	0x4002_CFFF	0x4002_C000	0x4002_CFFF
	SCI	4KB	0x4002_D000	0x4002_DFFF	0x4002_D000	0x4002_DFFF
	Reserved	4KB	0x4002_E000	0x4002_EFFF	0x4002_E000	0x4002_EFFF
	I2C4	4KB	0x4002_F000	0x4002_FFFF	0x4002_E000	0x4002_FFFF
	Reserved	64KB	0x4003_0000	0x4003_FFFF	0x4003_0000	0x4003_FFFF
HPSYS_APB2		**256KB**	**0x4004_0000**	**0x4007_FFFF**	**0x4004_0000**	**0x4007_FFFF**
	HPSYS_AON	4KB	0x4004_0000	0x4004_0FFF	0x4004_0000	0x4004_0FFF
	LPTIM1	4KB	0x4004_1000	0x4004_1FFF	0x4004_1000	0x4004_1FFF
	Reserved	4KB	0x4004_2000	0x4004_2FFF	0x4004_2000	0x4004_2FFF
	Reserved	52KB	0x4004_3000	0x4004_FFFF	0x4004_3000	0x4004_FFFF
	Reserved	64KB	0x4005_0000	0x4005_FFFF	0x4005_0000	0x4005_FFFF
	Reserved	64KB	0x4006_0000	0x4006_FFFF	0x4006_0000	0x4006_FFFF
	Reserved	64KB	0x4007_0000	0x4007_FFFF	0x4007_0000	0x4007_FFFF
HPSYS_AHB		**256KB**	**0x4008_0000**	**0x400B_FFFF**	**0x4008_0000**	**0x400B_FFFF**
	GPIO1	4KB	0x4008_0000	0x4008_0FFF	0x4008_0000	0x4008_0FFF
	MPI1	4KB	0x4008_1000	0x4008_1FFF	0x4008_1000	0x4008_1FFF
	MPI2	4KB	0x4008_2000	0x4008_2FFF	0x4008_2000	0x4008_2FFF
	MPI3	4KB	0x4008_3000	0x4008_3FFF	0x4008_3000	0x4008_3FFF
	Reserved	4KB	0x4008_4000	0x4008_4FFF	0x4008_4000	0x4008_4FFF
	SDMMC1	4KB	0x4008_5000	0x4008_5FFF	0x4008_5000	0x4008_5FFF
	SDMMC2	4KB	0x4008_6000	0x4008_6FFF	0x4008_6000	0x4008_6FFF
	USBC	4KB	0x4008_7000	0x4008_7FFF	0x4008_7000	0x4008_7FFF
	CRC1	4KB	0x4008_8000	0x4008_8FFF	0x4008_8000	0x4008_8FFF
	Reserved	28KB	0x4008_9000	0x4008_FFFF	0x4008_9000	0x4008_FFFF
	GFX_RAM	64KB	0x4009_0000	0x4009_FFFF	0x4009_0000	0x4009_FFFF
	Reserved	128KB	0x400A_0000	0x400B_FFFF	0x400A_0000	0x400B_FFFF

©2026 SiFli Technologies (Nanjing) Co., Ltd. www.sifli.com

1.3.5 Interrupt List

Table 1-2: Interrupt List of HCPU

IRQ #	IRQ Source
NMI	WDT1
IRQ[0]	AON
IRQ[1]	LCPU_IRQ[1]
IRQ[2]	LCPU_IRQ[2]
IRQ[3]	LCPU_IRQ[3]
IRQ[4]	LCPU_IRQ[4]
IRQ[5]	LCPU_IRQ[5]
IRQ[6]	LCPU_IRQ[6]
IRQ[7]	LCPU_IRQ[7]
IRQ[8]	LCPU_IRQ[8]
IRQ[9]	LCPU_IRQ[9]
IRQ[10]	LCPU_IRQ[10]
IRQ[11]	LCPU_IRQ[11]
IRQ[12]	LCPU_IRQ[12]
IRQ[13]	LCPU_IRQ[13]
IRQ[14]	LCPU_IRQ[14]
IRQ[15]	LCPU_IRQ[15]
IRQ[16]	LCPU_IRQ[16]
IRQ[17]	LCPU_IRQ[17]
IRQ[18]	LCPU_IRQ[18]
IRQ[19]	LCPU_IRQ[19]
IRQ[20]	LCPU_IRQ[20]
IRQ[21]	LCPU_IRQ[21]
IRQ[22]	LCPU_IRQ[22]
IRQ[23]	LCPU_IRQ[23]
IRQ[24]	LCPU_IRQ[24]
IRQ[25]	LCPU_IRQ[25]
IRQ[26]	LCPU_IRQ[26]
IRQ[27]	LCPU_IRQ[27]
IRQ[28]	LCPU_IRQ[28]
IRQ[29]	LCPU_IRQ[29]
IRQ[30]	LCPU_IRQ[30]
IRQ[31]	LCPU_IRQ[31]
IRQ[32]	LCPU_IRQ[32]
IRQ[33]	LCPU_IRQ[33]
IRQ[34]	LCPU_IRQ[34]
IRQ[35]	LCPU_IRQ[35]
IRQ[36]	LCPU_IRQ[36]
IRQ[37]	LCPU_IRQ[37]
IRQ[38]	LCPU_IRQ[38]
IRQ[39]	LCPU_IRQ[39]
IRQ[40]	LCPU_IRQ[40]
IRQ[41]	LCPU_IRQ[41]
IRQ[42]	LCPU_IRQ[42]
IRQ[43]	LCPU_IRQ[43]
IRQ[44]	LCPU_IRQ[44]
IRQ[45]	LCPU_IRQ[45]
IRQ[46]	LPTIM1
IRQ[47]	rsvd

Continued on the next page

©2026 SiFli Technologies (Nanjing) Co., Ltd. www.sifli.com

Table 1-2: Interrupt List of HCPU (continued)

IRQ #	IRQ Source
IRQ[48]	rsvd
IRQ[49]	RTC
IRQ[50]	DMAC1_CH1
IRQ[51]	DMAC1_CH2
IRQ[52]	DMAC1_CH3
IRQ[53]	DMAC1_CH4
IRQ[54]	DMAC1_CH5
IRQ[55]	DMAC1_CH6
IRQ[56]	DMAC1_CH7
IRQ[57]	DMAC1_CH8
IRQ[58]	LCPU2HCPU
IRQ[59]	UART1
IRQ[60]	SPI1
IRQ[61]	I2C1
IRQ[62]	EPIC
IRQ[63]	LCDC1
IRQ[64]	I2S1
IRQ[65]	rsvd
IRQ[66]	EFUSEC
IRQ[67]	AES
IRQ[68]	PTC1
IRQ[69]	TRNG
IRQ[70]	GPTIM1
IRQ[71]	GPTIM2
IRQ[72]	BTIM1
IRQ[73]	BTIM2
IRQ[74]	UART2
IRQ[75]	SPI2
IRQ[76]	I2C2
IRQ[77]	EXTDMA
IRQ[78]	I2C4
IRQ[79]	SDMMC1
IRQ[80]	SDMMC2
IRQ[81]	NNACC1
IRQ[82]	PDM1
IRQ[83]	CAN1
IRQ[84]	GPIO1
IRQ[85]	MPI1
IRQ[86]	MPI2
IRQ[87]	MPI3
IRQ[88]	FFT1
IRQ[89]	EZIP1
IRQ[90]	AUDPRC
IRQ[91]	PDM2
IRQ[92]	USBC
IRQ[93]	I2C3
IRQ[94]	ATIM1
IRQ[95]	UART3
IRQ[96]	AUD_HP
IRQ[97]	SCI
IRQ[98]	FACC1
IRQ[99]	rsvd

©2026 SiFli Technologies (Nanjing) Co., Ltd. www.sifli.com

1.4 Low-Power Processor (LITTLE Core) System (LPSYS)

1.4.1 Bus Architecture

The LPSYS provides an internal bus matrix based on the AHB protocol, which supports multiple master devices to access the address spaces of multiple slave devices in parallel.

As shown in Figure **??**, the master devices of the bus are located on the top side and the address spaces of the slave devices are located on the right side, and the black dots at the intersection represent bus connectivity.

LCPU and DMAC2 has access to all address spaces of LPSYS, and can access the address spaces of HPSYS (except HPSYS_ITCM) via LP2HP.

Some master devices of HPSYS can access the address spaces of LPSYS through HP2LP.

LPSYS_ITCM and LPSYS_DTCM can be accessed by LCPU and DMAC2, and also by some master devices of the HPSYS.

When multiple master devices access the address space of the same slave device at the same time, the access order will be determined based on the polling arbitration principle.

As shown in the figure, when multiple master devices with unconnected borders access the address spaces of different slave devices at the same time, they will not be affected by each other. When two master devices with connected borders initiate access at the same time, the access order will be decided based on the polling arbitration principle.

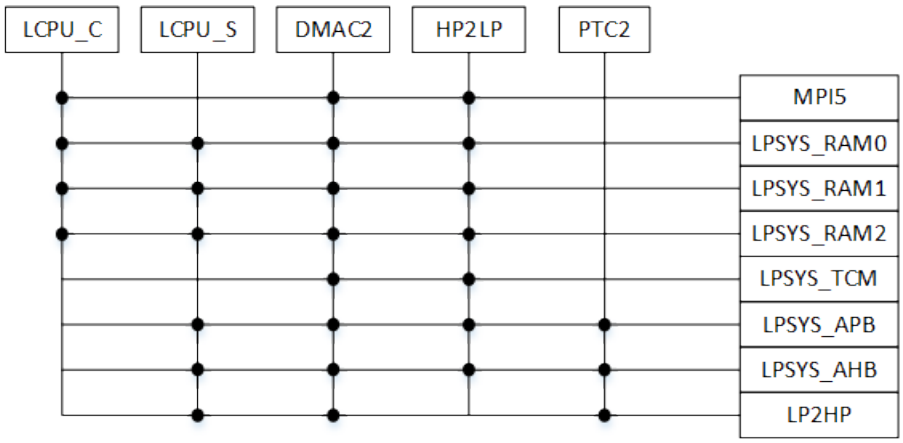

Figure 1-3: Bus Architecture of LPSYS

©2026 SiFli Technologies (Nanjing) Co., Ltd. www.sifli.com

1.4.2 Clock Architecture

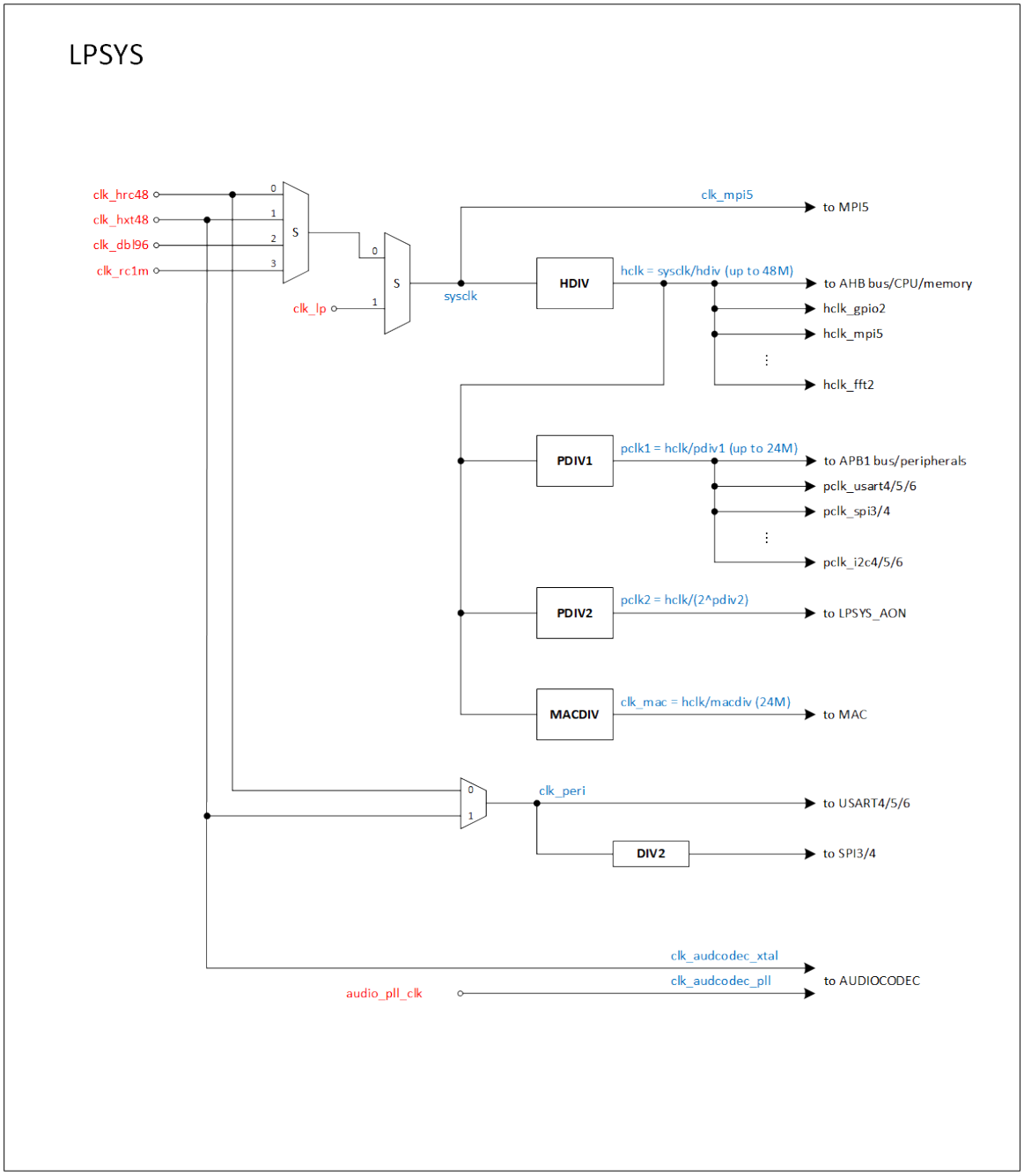

Figure 1-4: Clock Architecture of LPSYS

©2026 SiFli Technologies (Nanjing) Co., Ltd. www.sifli.com

1.4.3 Memory Type

1.4.3.1 Cache

LCPU has 16KB 2-way I-Cache (Level 1 instruction cache) and 8KB 4-way D-Cache (Level 1 data cache).

1.4.3.2 TCM

LCPU has 16KB zero-wait-cycle I-TCM with address space 0x003F_C000 –0x003F_FFFF. This TCM memory is exclusive to LCPU and can be initialized by HCPU via address segments 0x20BF_C000 –0x20BF_FFFF. It is recommended to place codes and data with high real-time (or delay determinism) requirements.

LCPU also has 16KB zero-wait-cycle D-TCM with address space 0x203F_C000 –0x203F_FFFF. This TCM memory is exclusive to LCPU and can be initialized by HCPU via the same address segment.

1.4.3.3 SRAM

There is a total of 128KB one-wait-cycle SRAM on LPSYS bus, and the address space is 0x2040_0000–0x2041_FFFF. The maximum frequency is 48MHz at 0.9V and 96MHz at 1.1V.

1.4.3.4 Off-chip Flash

LPSYS supports external NOR FLASH for system startup, with address space 0x1C00_0000 –0x1FFF_FFFF.

1.4.4 Address Mapping

Table 1-3: Address Mapping of LPSYS

Category		Memory /IP	Address Space		HCPU Starting Address	HCPU Ending Address	LCPU Starting Address	LCPU Ending Address		
LPSYS_ITCM		**4MB**	**0x2080_0000**		**0x20BF_FFFF**		**0x0000_0000**		**0x003F_FFFF**	
	ROM	384KB	0x2080_0000		0x2085_FFFF		0x0000_0000		0x0005_FFFF	
	Reserved	-	-		-		-		-	
	RAM	16KB	0x20BF_C000		0x20BF_FFFF		0x003F_C000		0x003F_FFFF	
LPSYS_DTCM		**4MB**	**0x2000_0000**		**0x203F_FFFF**		**0x2000_0000**		**0x203F_FFFF**	
	Reserved	-	-		-		-		-	
	RAM	16KB	0x203F_C000		0x203F_FFFF		0x203F_C000		0x203F_FFFF	
External Memory		**64MB**	**0x1C00_0000**		**0x1FFF_FFFF**		**0x1C00_0000**		**0x1FFF_FFFF**	
	MPI5 Memory	64MB	0x1C00_0000		0x1FFF_FFFF		0x1C00_0000		0x1FFF_FFFF	
LPSYS_RAM		**128KB**	**0x20C0_0000**	**0x2040_0000**	**0x20C1_FFFF**	**0x2041_FFFF**	**0x0040_0000**	**0x2040_0000**	**0x0041_FFFF**	**0x2041_FFFF**
	RAM0	64KB	0x20C0_0000	0x2040_0000	0x20C0_FFFF	0x2040_FFFF	0x0040_0000	0x2040_0000	0x0040_FFFF	0x2040_FFFF
	RAM1	32KB	0x20C1_0000	0x2041_0000	0x20C1_7FFF	0x2041_7FFF	0x0041_0000	0x2041_0000	0x0041_7FFF	0x2041_7FFF
	RAM2 (EM)	32KB	0x20C1_8000	0x2041_8000	0x20C1_FFFF	0x2041_FFFF	0x0041_8000	0x2041_8000	0x0041_FFFF	0x2041_FFFF
LPSYS_APB1		**192KB**	**0x5000_0000**		**0x5003_FFFF**		**0x5000_0000**		**0x5003_FFFF**	
	RCC2	4KB	0x5000_0000		0x5000_0FFF		0x5000_0000		0x5000_0FFF	
	DMAC2	4KB	0x5000_1000		0x5000_1FFF		0x5000_1000		0x5000_1FFF	
	MAILBOX2	4KB	0x5000_2000		0x5000_2FFF		0x5000_2000		0x5000_2FFF	
	PINMUX2	4KB	0x5000_3000		0x5000_3FFF		0x5000_3000		0x5000_3FFF	
	PATCH	4KB	0x5000_4000		0x5000_4FFF		0x5000_4000		0x5000_4FFF	
	USART4	4KB	0x5000_5000		0x5000_5FFF		0x5000_5000		0x5000_5FFF	
	USART5	4KB	0x5000_6000		0x5000_6FFF		0x5000_6000		0x5000_6FFF	
	USART6	4KB	0x5000_7000		0x5000_7FFF		0x5000_7000		0x5000_7FFF	
	Reserved	4KB	0x5000_8000		0x5000_8FFF		0x5000_8000		0x5000_8FFF	
	SPI3	4KB	0x5000_9000		0x5000_9FFF		0x5000_9000		0x5000_9FFF	
	SPI4	4KB	0x5000_A000		0x5000_AFFF		0x5000_A000		0x5000_AFFF	
	WDT2	4KB	0x5000_B000		0x5000_BFFF		0x5000_B000		0x5000_BFFF	
	I2C5	4KB	0x5000_C000		0x5000_CFFF		0x5000_C000		0x5000_CFFF	
	I2C6	4KB	0x5000_D000		0x5000_DFFF		0x5000_D000		0x5000_DFFF	
	I2C7	4KB	0x5000_E000		0x5000_EFFF		0x5000_E000		0x5000_EFFF	
	SYSCFG2	4KB	0x5000_F000		0x5000_FFFF		0x5000_F000		0x5000_FFFF	
	GPTIM3	4KB	0x5001_0000		0x5001_0FFF		0x5001_0000		0x5001_0FFF	
	GPTIM4	4KB	0x5001_1000		0x5001_1FFF		0x5001_1000		0x5001_1FFF	
	GPTIM5	4KB	0x5001_2000		0x5001_2FFF		0x5001_2000		0x5001_2FFF	
	BTIM3	4KB	0x5001_3000		0x5001_3FFF		0x5001_3000		0x5001_3FFF	
	BTIM4	4KB	0x5001_4000		0x5001_4FFF		0x5001_4000		0x5001_4FFF	
	Reserved	4KB	0x5001_5000		0x5001_5FFF		0x5001_5000		0x5001_5FFF	

Continued on the next page

©2026 SiFli Technologies (Nanjing) Co., Ltd. www.sifli.com

Table 1-3: Address Mapping of LPSYS (continued)

Category		Memory /IP	Address Space	HCPU		LCPU	
				Starting Address	Ending Address	Starting Address	Ending Address
	GPADC	4KB	0x5001_6000	0x5001_6FFF		0x5001_6000	0x5001_6FFF
	Reserved	4KB	0x5001_7000	0x5001_7FFF		0x5001_7000	0x5001_7FFF
	AUDADC	4KB	0x5001_8000	0x5001_8FFF		0x5001_8000	0x5001_8FFF
	LPCOMP	4KB	0x5001_9000	0x5001_9FFF		0x5001_9000	0x5001_9FFF
	TSEN	4KB	0x5001_A000	0x5001_AFFF		0x5001_A000	0x5001_AFFF
	PTC2	4KB	0x5001_B000	0x5001_BFFF		0x5001_B000	0x5001_BFFF
	Reserved	4KB	0x5001_C000	0x5001_CFFF		0x5001_C000	0x5001_CFFF
	BUSMON2	4KB	0x5001_D000	0x5001_DFFF		0x5001_D000	0x5001_DFFF
	Reserved	4KB	0x5001_E000	0x5001_EFFF		0x5001_E000	0x5001_EFFF
	Reserved	4KB	0x5001_F000	0x5001_FFFF		0x5001_F000	0x5001_FFFF
	Reserved	64KB	0x5002_0000	0x5002_FFFF		0x5002_0000	0x5002_FFFF
	Reserved	64KB	0x5003_0000	0x5003_FFFF		0x5003_0000	0x5003_FFFF
LPSYS_APB2		**64KB**	**0x5004_0000**	**0x5007_FFFF**		**0x5004_0000**	**0x5007_FFFF**
	LPSYS_AON	4KB	0x5004_0000	0x5004_0FFF		0x5004_0000	0x5004_0FFF
	LPTIM2	4KB	0x5004_1000	0x5004_1FFF		0x5004_1000	0x5004_1FFF
	LPTIM3	4KB	0x5004_2000	0x5004_2FFF		0x5004_2000	0x5004_2FFF
	Reserved	4KB	0x5004_3000	0x5004_3FFF		0x5004_3000	0x5004_3FFF
	Reserved	24KB	0x5004_4000	0x5004_9FFF		0x5004_4000	0x5004_9FFF
	PMUC	4KB	0x5004_A000	0x5004_AFFF		0x5004_A000	0x5004_AFFF
	RTC	4KB	0x5004_B000	0x5004_BFFF		0x5004_B000	0x5004_BFFF
	IWDT	4KB	0x5004_C000	0x5004_CFFF		0x5004_C000	0x5004_CFFF
	Reserved	12KB	0x5004_D000	0x5004_FFFF		0x5004_D000	0x5004_FFFF
	Reserved	64KB	0x5005_0000	0x5005_FFFF		0x5005_0000	0x5005_FFFF
	Reserved	64KB	0x5006_0000	0x5006_FFFF		0x5006_0000	0x5006_FFFF
	EUROPA	4KB	0x5007_0000	0x5007_0FFF		0x5007_0000	0x5007_0FFF
	Reserved	60KB	0x5007_1000	0x5007_FFFF		0x5007_1000	0x5007_FFFF
LPSYS_AHB		**256KB**	**0x5008_0000**	**0x500B_FFFF**		**0x5008_0000**	**0x500B_FFFF**
	GPIO2	4KB	0x5008_0000	0x5008_0FFF		0x5008_0000	0x5008_0FFF
	MPI5	4KB	0x5008_1000	0x5008_1FFF		0x5008_1000	0x5008_1FFF
	RFC	8KB	0x5008_2000	0x5008_3FFF		0x5008_2000	0x5008_3FFF
	PHY	4KB	0x5008_4000	0x5008_4FFF		0x5008_4000	0x5008_4FFF
	CRC2	4KB	0x5008_5000	0x5008_5FFF		0x5008_5000	0x5008_5FFF
	Reserved	40KB	0x5008_6000	0x5008_FFFF		0x5008_6000	0x5008_FFFF
	MAC	64KB	0x5009_0000	0x5009_FFFF		0x5009_0000	0x5009_FFFF
	Reserved	128KB	0x500A_0000	0x500B_FFFF		0x500A_0000	0x500B_FFFF
PHY_DUMP		**64KB**	**0x500C_0000**	**0x500C_FFFF**		**0x500C_0000**	**0x500C_FFFF**
	PHY_DUMP	64KB	0x500C_0000	0x500C_FFFF		0x500C_0000	0x500C_FFFF

1.4.5 Interrupt List

Table 1-4: Interrupt List of LCPU

IRQ #	IRQ Source
NMI	WDT2
IRQ[0]	AON
IRQ[1]	BLE
IRQ[2]	DMAC2_CH1
IRQ[3]	DMAC2_CH2
IRQ[4]	DMAC2_CH3
IRQ[5]	DMAC2_CH4
IRQ[6]	DMAC2_CH5
IRQ[7]	DMAC2_CH6
IRQ[8]	DMAC2_CH7
IRQ[9]	DMAC2_CH8
IRQ[10]	PATCH
IRQ[11]	DM
IRQ[12]	UART4
IRQ[13]	UART5
IRQ[14]	UART6
IRQ[15]	BT
IRQ[16]	SPI3
IRQ[17]	SPI4
IRQ[18]	I2S3
IRQ[19]	I2C5
IRQ[20]	I2C6

Continued on the next page

©2026 SiFli Technologies (Nanjing) Co., Ltd. www.sifli.com

Table 1-4: Interrupt List of LCPU (continued)

IRQ #	IRQ Source
IRQ[21]	I2C7
IRQ[22]	GPTIM3
IRQ[23]	GPTIM4
IRQ[24]	GPTIM5
IRQ[25]	BTIM3
IRQ[26]	BTIM4
IRQ[27]	AUD_LP
IRQ[28]	GPADC
IRQ[29]	rsvd
IRQ[30]	HPSYS0
IRQ[31]	HPSYS1
IRQ[32]	TSEN
IRQ[33]	PTC2
IRQ[34]	rsvd
IRQ[35]	GPIO2
IRQ[36]	MPI5
IRQ[37]	rsvd
IRQ[38]	FFT2
IRQ[39]	rsvd
IRQ[40]	rsvd
IRQ[41]	LPCOMP
IRQ[42]	LPTIM2
IRQ[43]	LPTIM3
IRQ[44]	HPSYS2
IRQ[45]	HPSYS3
IRQ[46]	HCPU2LCPU
IRQ[47]	RTC

©2026 SiFli Technologies (Nanjing) Co., Ltd. www.sifli.com

1.5 Power Management

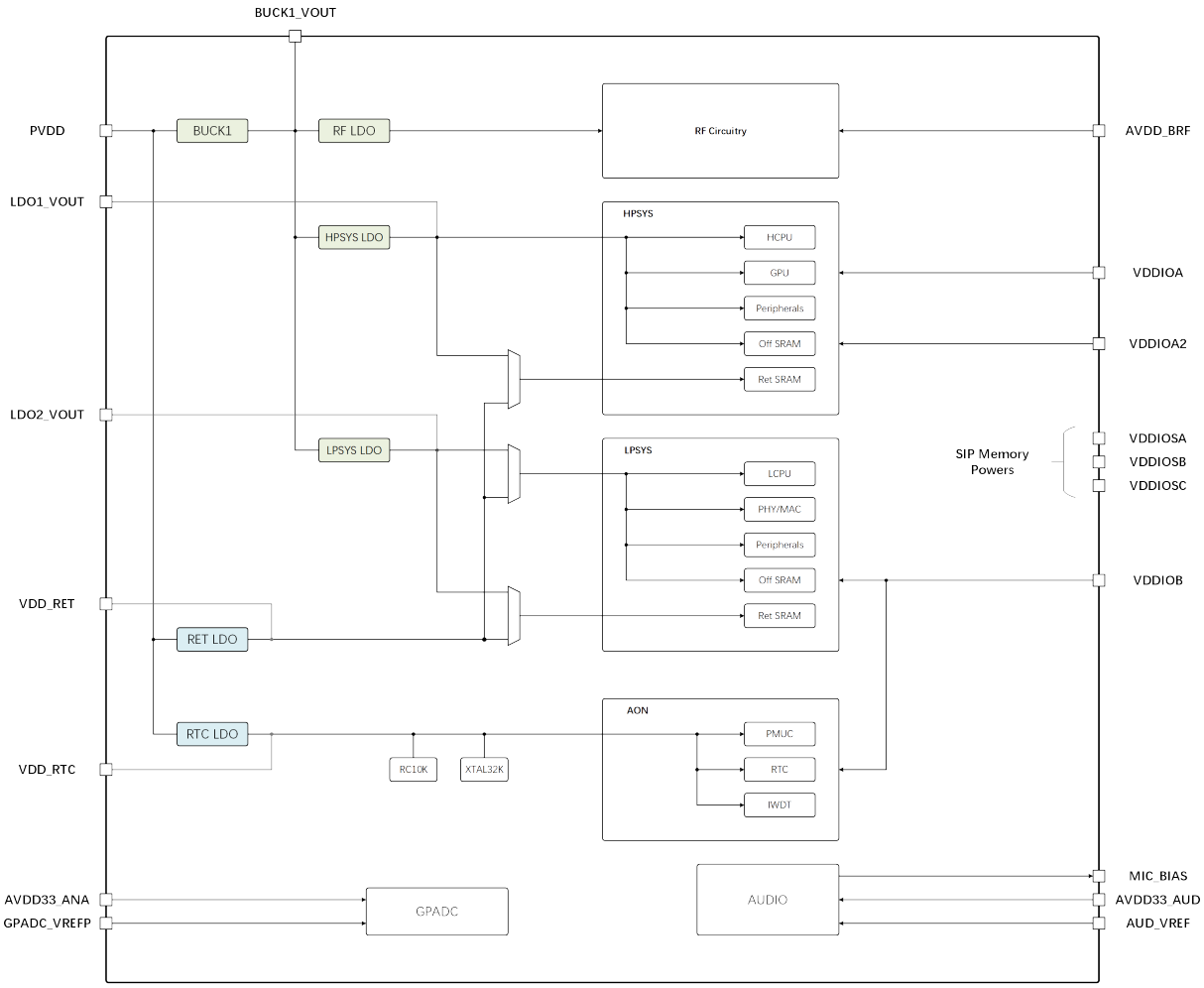

Figure 1-5: Power Management Architecture of BGA Package

©2026 SiFli Technologies (Nanjing) Co., Ltd. www.sifli.com

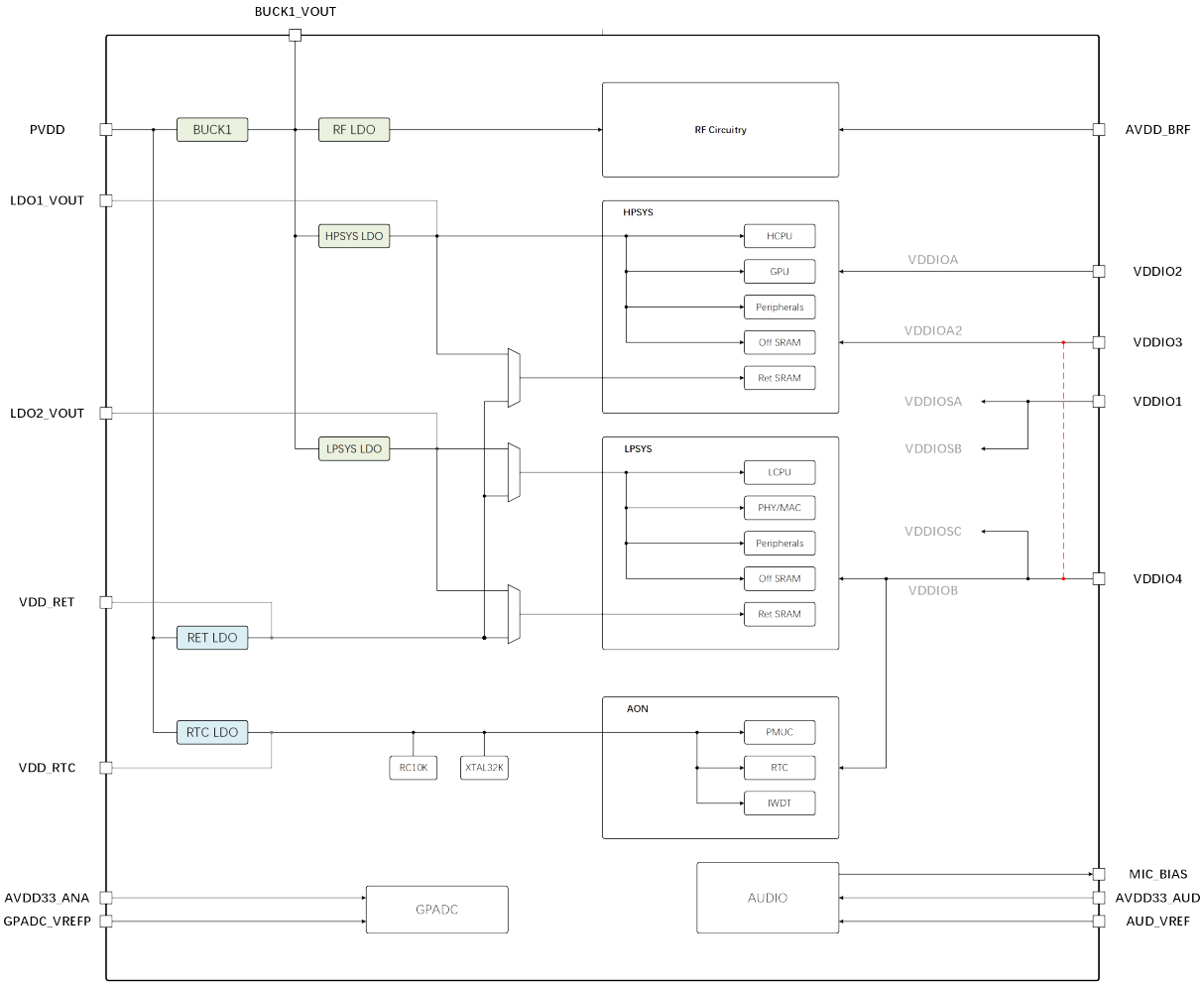

Figure 1-6: Power Management Architecture of QFN Package

Notes:

Compared with the BGA package, the QFN package combines some IO power supplies and SIP Memory power supplies.

- SF32LB561/563: VDDIOSA and VDDIOSB merged into VDDIO1, VDDIOSC and VDDIOB merged into VDDIO4
- SF32LB560: Further merge the above VDDIO4 and VDDIO3 into VDDIO3 (red dotted line)

©2026 SiFli Technologies (Nanjing) Co., Ltd. www.sifli.com

2 High-Performance Dedicated Computing

2.1 ePicasso™ High-Performance 2.5D GPU

In 2.5D image processing, many common image operations will consume a lot of CPU computing resources. ePicasso™ is an acceleration GPU designed specifically for 2.5D image operations. It can provide exponential speed improvements for common 2.5D image operations such as layer overlay, scaling, and rotation. In addition, ePicasso™ is compatible with various common RGB image formats, simplifying the conversion of different image formats in the system.

2.1.1 Layer Overlay

ePicasso™ supports four foreground layers, one dedicated mask layer, and one monochrome background layer. The input and output formats include commonly used RGB565, RGB888, ARGB8565, ARGB8888, L8, A8, A4 and YUV. Each foreground layer has a separate overlay mode and overlay area, and the mask layer is mainly used to extract specific shapes of the image. In addition, each layer also has a separate filter configuration option, which can make the layer filter out a specific color. This function can be used for simple image capture.

2.1.2 Graphics Scaling

ePicasso™ has a layer called functional layer, which, in addition to supporting overlays, enables the scaling of graphics up to 1024 times, with an accuracy of 1/65536. The scaling can be configured separately in the X and Y directions to suit different requirements.

2.1.3 Graphics Rotation

In addition to scaling, the functional layer of ePicasso™ can support high-precision rotation of images. Users can customize the sin/cos values of the rotation angle to meet the rotation requirements of any angle. Rotation and scaling can be enabled at the same time to complete two operations of the image at one time, which improves the performance of image processing.

2.2 LCD Controller

The LCD controller is mainly used to output data from the Framebuffer to the external display, and the existing LCD controller can support common screen interfaces, including DBI and DPI. In addition, the LCD controller also supports images of compressed format, which can significantly reduce the memory usage bandwidth and improve system performance.

2.2.1 TurboPixel™ Frame Buffer Compression

To improve the frame rate of the image and the smoothness of the display, multiple (two or three) frame buffers are frequently used. Typically, in order to parallelize image output and image processing, dedicated frame buffers are

©2026 SiFli Technologies (Nanjing) Co., Ltd. www.sifli.com

required to output image data to the screen. To reduce the memory space and reading bandwidth of these frame buffers, the MCU system provides a TurboPixel™ image frame compression module based on proprietary algorithm. When reading the image data, the decompression module in the LCD controller can directly read the compressed data and output the decompressed data to the screen. In this way, the memory space of the frame buffer and the bandwidth resources consumed by reading can be saved.

2.2.2 Display Interface

The LCD controller is mainly used for the adaptation between the data for display and the mainstream display interfaces, and the following display interfaces are supported by this chip.

2.2.2.1 MIPI-DBI

The LCD controller can support serial SPI mode and parallel 8080 mode in the DBI interface. For SPI mode, the LCD controller can support both 3-wire and 4-wire modes, as well as dual/quad data line operations. It supports 8-bit RGB332, 16-bit RGB565 and 24-bit RGB888 in color format. For the 8080 mode, the LCD controller supports bus widths of 8-bit, 16-bit and 24-bit, and also supports color formats of RGB332, RGB444, RGB565, RGB666 and RGB888.

2.2.2.2 MIPI-DPI

To support screens without built-in cache, the LCD controller has also added support for the DPI interface, which has a 24-bit data width and supports color formats of RGB565 and RGB888. In addition, the LCD controller provides flexible VBP, VFP, HBP and HFP controls to meet the needs of different screen types.

2.2.2.3 JDI Reflective Display

To meet the low-power requirements of wearable products, JDI has developed an ultra-low-power reflective display that uses the sun's rays to present images. Compared with the traditional LCD screen, the power consumption can be reduced by more than 95%. It can be used in wearable products to achieve long battery life. The LCD controller also added support for JDI reflective display interface, including serial interface and parallel interface. The two interfaces can support up to 64-color display, and support partial refresh and full-screen refresh, thereby further reducing the power consumption of screen refresh and meeting the needs of long battery life.

2.3 eZip™ Lossless Compression Decoder

The eZip™ decoder is a real-time lossless decompression module based on proprietary algorithm, with a compression rate equivalent to that of the Zip format. It can be used to decode the general data before saving it, which will improve the real-time loading capability of the data. If the data is transferred from outside the chip, the transfer after compression will help shorten the transfer time and reduce the power consumption.

In addition, eZip™ also supports image compression of proprietary formats, with a compression rate equivalent to that of the PNG format, and supports independent DMA operations or reading linked with ePicasso™. When operating independently, eZip™ can flexibly decompress and transport the compressed pictures stored in Flash or RAM to the target cache through the DMA mechanism. In the linkage mode, ePicasso™ reads pictures from the memory in real time and decompresses them in real time through the eZip™ module, and then performs the required 2.5D calculations according to the general graphics process, thereby saving the cache for temporary storage of decompressed pictures.

©2026 SiFli Technologies (Nanjing) Co., Ltd. www.sifli.com

Through the above mechanism, eZip™ can effectively reduce the demand for storage capacity of image materials, maximize the richness of materials in limited storage, and reduce the bandwidth requirements for off-chip storage, thereby greatly improving the overall operating efficiency of the system.

The eZip™ module is a module for decoding the eZip™ compressed images and outputting them. The module reads compressed data through the AHB bus, and the decoded image data can be configured to be output through the AHB bus or directly sent to the epic module for subsequent processing.

The module has the following characteristics:

- The data address input/output via the AHB bus can be configured
- Output image data can be sent directly to the epic module
- Can output image data for a specified area
- Support decoding parameter cache function, which can shorten decoding time in case of cache hit

2.4 Neural Network Accelerator

2.4.1 Neural Network Matrix Convolution Accelerator (NNACC)

The matrix convolution accelerator is designed to meet the needs for the underlying matrix computing power in machine learning, and can be widely applied to various neural network frameworks. The accelerator has rich memory and access interfaces and provides flexible data address configuration. It supports a maximum input matrix of 255×255 and a maximum number of input and output channels of 128. It supports 8bit integer operations, which can meet most of the edge-end AI computing requirements, such as voice command recognition, heart rate, pedometer, electrocardiogram and other sensor calculations.

2.4.2 Neural Network Co-Processor (NN Co-Processor)

The neural network coprocessor is connected to the hpcpu/lpcpu through the coprocessor interface. The software calls the processor through special coprocessor instructions.

The coprocessor has the following characteristics:

- Data bus width of 64Bit
- Support MAC operations with 8Bit width
- Support 4 independent MAC operations for a single instruction

2.5 Digital Signal Processing Accelerators

2.5.1 FFT Accelerator

FFT operation requires high computing power. Using FFT accelerator can reduce CPU load and improve system performance. The FFT accelerator is integrated in HPSYS to meet the FFT computing power requirements in more scenarios.

Features of FFT accelerator:

©2026 SiFli Technologies (Nanjing) Co., Ltd. www.sifli.com

- Support maximum 512-point minimum 16-point FFT
- Support 24-point, 16-point and 8-point fixed-point signed number inputs and outputs, and the bit widths are independently configurable
- Support real number FFT operation
- Support IFFFT
- Support windowed FFT/IFFT
- Support DCT/IDCT

2.5.2 Cordic Coprocessor

The Cordic coprocessor is used to compute trigonometric and hyperbolic functions and some arithmetic operations derived from them. There is one Cordic coprocessor integrated in each of HPSYS/LPSYS.

Features of Cordic coprocessor：

- Support ARM coprocessor instructions
- Support ARM Custom Datapath Extention instructions (only HPSYS)
- Support trigonometric function operations: cos, sin, ang, mod, atan, rot
- Support hyperbolic function operations: cosh, sinh, atanh, angh, modh, mul, div, ln, exp, sqrt
- Support 32-bit fixed-point inputs and outputs

©2026 SiFli Technologies (Nanjing) Co., Ltd. www.sifli.com

3 Peripherals

3.1 Dual-mode Bluetooth 6.3

3.1.1 RF and Baseband

BLE RF and baseband include the transmitter and the receiver. The transmitter modulates the baseband signal to the 2.4G frequency band and transmits it, and the receiver receives the over-the-air 2.4G frequency band signal and demodulates it to the baseband signal.

The main features are:

- Support Bluetooth 6.3 protocol: 1M PHY (1Mbps), 2M PHY (2Mbps), BR PHY（1Mbps）, EDR2 PHY（2Mbps）, EDR3 PHY（3Mbps）
- Integrated AGC
- Support RSSI
- The receiver supports automatic frequency offset correction
- Adjustable transmit power, BLE/BR PHY max. Tx 19dBm, EDR2/EDR3 max. Tx 13dBm
- Integrated Balun and antenna matching network, no off-chip matching required

3.1.2 BT MAC

The BT MAC is a dual-mode baseband controller that fully supports Bluetooth protocol v6.3 and is compatible with v4.2, v4.1, and 4.0. It is mainly used for packet encoding and decoding as well as event scheduling.

The main functions are as follows:

- BLE mode:
  1. Support rate (1M/2M);
  2. Support all packet formats (broadcast packet/expanded broadcast packet/data packet, etc.);
  3. Support data encryption and decryption;
  4. Support data stream processing (redundancy checking, whitening);
  5. Support two frequency hopping modes;
- Classic Bluetooth mode:
  1. Support all packet types of ACL, CSB, SCO and eSCO;
  2. Support data encryption and decryption (E0 encryption and AES-CCM encryption);
  3. Support data stream processing (HEC, CRC, Whitening, FEC2/3, FEC1/3);
  4. Support coding and decoding of audio data (CVSD and a/μ-Law);
  5. Support adaptive frequency hopping;
- And
  - Support AMBA AHB bus access;
  - Support WLAN/MWS coexistence mechanism.

©2026 SiFli Technologies (Nanjing) Co., Ltd. www.sifli.com

3.2 Analog Peripherals

3.2.1 12Bit Analog/Digital Converter

GPADC contains a SARADC, and the basic function is to convert the external input voltages into digital signals.

The main features of GPADC are:

- 12-bit resolution
- Maximum sampling rate 4MS/s
- Single-ended input voltage: 0 ~ 3.3V
- Differential input voltage: -2.1V ~ +2.1V
- Support 8 single-ended analog inputs or 4 pairs of differential analog inputs
- Support single measurement mode and cyclic measurement mode
- Each measurement can be divided into 8 time slots, and each time slot can be individually configured with analog input channels
- Support software (write register) and hardware (e.g. timer) triggering
- Support DMA channels
- Sampling frequency can be configured

Table 3-1: 12-bit GPADC Specifications

	Min.	Typ.	Max.	Unit	Comments
Resolution		12		bit	
T_{sample} (Differential)	125n		2/3	s	fs=1/(T_{sample}+$T_{conversion}$)
T_{sample} (Single-Ended)	166.66n		2/3	s	
$T_{conversion}$	125n		10.67u	s	
Sample rate (fs)			4	Msps	
ENOB (Differential)		10.6		bit	V_{in}=-1dBFs, no averaging
ENOB (Single-Ended)		10		bit	V_{in}=-3dBFs, no averaging
SNDR (Differential)		65.6		dB	V_{in}=-1dBFs, no averaging
SNDR (Single-Ended)		61.96		dB	V_{in}=-3dBFs, no averaging
Current Consumption		466		uA	fs=4Msps
		130		uA	fs=500ksps
		90		uA	fs=100ksps

The relationship between GPADC source resistance R_{AIN} and the sampling time is as follows:

Resolution (bit)	Number of T_{PCLK} Cycle @24MHz	T_{sample} (ns)	Maximum source resistance R_{AIN} (kOhm)
12	4	166	1
	15	625	5
	30	1250	10
	150	6250	50
	300	12500	100
	1500	62500	500
	15000	625000	5000

©2026 SiFli Technologies (Nanjing) Co., Ltd. www.sifli.com

3.2.2 Temperature Sensor

The temperature sensor converts the temperature into a voltage that changes with the temperature, and then converts the voltage into a number through the ADC. The system calls the temperature sensor through the software.

The main features are as follows:

- Temperature sensor resolution 0.2°C
- Support temperature range from -40°C to 125°C
- Temperature sensor accuracy -3°C to 3°C
- Support polling or interrupt mode reading

3.2.3 Low-Power Comparator

The LPCOMP (Low-Power Comparator) contains two independent voltage comparators which can compare the voltage of an external input analog signal to the reference voltage value to produce the comparison result. The two comparators can measure different signals separately or measure the same signal and produce a combined output. The reference voltage value can be input from an external source or generated internally by the chip. The comparator results can be read via IO output or via registers, and can also generate interrupt/ PTC event triggers or wake-up signals.

The LPCOMP is also capable of real-time monitoring when the system enters certain low-power modes, and waking the system up when a specific comparison result is detected.

Main features of LPCOMP:

- Two comparators, which can be used independently or in combination for window comparison
- Reference voltage selection
  - Internally generated 4 levels of reference voltage
  - External input
- Configurable hysteresis comparison
- Configurable power/speed gear
- Polarity reversal of the comparison results
- Post-processing of the comparison results
  - High/Low level
  - Rising edge/falling edge/any edge
- Multiple outputs
  - IO
  - Register
  - Interrupt
  - PTC trigger
  - LPTIM clock
  - Low-power sleep wakeup
- The system can also work under low-power mode (light sleep/deep sleep) and can be woken up

3.2.4 Audio DAC

Audio DAC is a module that converts digital audio signals into analog voltage output. The chip integrates two 24-bit DACs, supporting audio sampling rates from 8KHz to 48KHz, and supports differential output.

©2026 SiFli Technologies (Nanjing) Co., Ltd. www.sifli.com

3.2.5 Audio PLL

The main function of audio PLL is to provide high-precision clock for the audio system. It supports the fractional frequency division function with an adjustment accuracy of 48MHz/2^18, and can meet the needs of different sampling rates such as 48KHz, 32KHz and 44.1KHz.

3.2.6 Audio ADC

Audio ADC is a module that converts external analog singals into internal digital audio signals. The chip integrates two 24-bit ADCs, supporting audio sampling rates from 8KHz to 48KHz, and each ADC has separate gain adjustments.

3.3 DMA

3.3.1 ExtDMA

The ExtDMA (Extended Direct Memory Access) enables efficient data transfer between two different address ranges on the bus, and integrates the TurboPixel™image frame compression module for image compression while transferring. ExtDMA can also be used as a general-purpose DMA when compression is not enabled. Compared to DMAC, ExtDMA is more efficient in accessing external memory (e.g. FLASH, PSRAM), but it has only one channel, supports only 4-byte aligned handling, and does not respond to peripheral requests.

Main features of ExtDMA:

- Single AHB master controller,access SRAM PSRAM FLASH,etc.,support burst transmission
- Single transmission channel, built-in FIFO with a depth of 16 and a bit width of 32 bits
- Both the source address and the destination address are accessed in 4 bytes, and support automatic address increment
- The maximum number of transmission units in a single configuration is 2^20-1, with a fixed 4-byte transmission per unit, i.e., a maximum of 4M bytes in a single transmission
- Each channel supports transmission completion, half transmission, and transmission error event flags, and can generate interrupt requests independently
- Integrated TurboPixel™image frame compression function, support RGB565/ RGB888/ ARGB8888 format input, supports up to 512 pixels in a single line.

3.3.2 DMAC

The DMAC (Direct Memory Access Controller) is used to carry out data transfer between two different address ranges on the bus. DMAC has a total of 8 independent channels. Each channel can be configured with a source address range and a target address range, which are respectively mapped to the address range of each memory or peripheral, so as to achieve high-efficiency transmission between memory-memory, memory-peripheral, peripheral-memory, and peripheral-peripheral, which can effectively alleviate the workload of the CPU.

The DMAC supports peripheral response mode and memory handling mode: In the peripheral response mode, the DMAC performs handling based on the DMA request of the peripheral, thereby adapting the bandwidth of the peripheral; In the memory handling mode, the DMAC does not wait for the DMA request of the peripheral, and will complete data transfer as soon as possible. When multiple channels are enabled at the same time, the DMAC will transport in order of priority

©2026 SiFli Technologies (Nanjing) Co., Ltd. www.sifli.com

from high to low; and in the process of transporting lower priority channels, the higher priority channels can carry out the preemption handling. Each channel can generate an interrupt or PTC trigger when the transmission is halfway or complete.

DMAC1 and DMAC2 is located in HPSYS and can respond to DMA requests from HPSYS peripherals. DMAC3 is located in LPSYS and can respond to DMA requests from LPSYS peripherals.

Main features of DMAC:

- Single AHB master controller,access SRAM PSRAM FLASH,AHB,APB,etc.
- 8 independent configurable channels
- The DMA request for each channel can be selected from up to 64 peripheral DMA requests, or can be requested by software
- Each channel supports 4 levels of priority configuration, when the priority is the same, it is judged according to the channel number
- Support peripheral-memory, memory-peripheral, memory-memory, peripheral-peripheral transfer
- Support single-byte/ double-byte/ 4-byte access to both source and destination addresses independently.The addresses of the source and target must be aligned according to the size of the transmission data unit, and support automatic address increment.During the transmission process, the address does not support crossing the 1MB boundary
- The number of single transmission units can be configured from 0 to 65536.
- Support cyclic buffering mode, which will automatically restart after a single transfer is completed
- Each channel supports 3 types of event flags,i.e. transmission completed, half-transmission, transmission error, and can independently generate interrupts or PTC triggers
- Each channel supports block transfer mode with configurable block size

3.4 AUDPRC

The audio processing module performs sampling rate conversion, mixing and equalization for audio data from different sources, and sends the processed audio data to the corresponding playback or storage device. It mainly includes two main data paths, the DAC path for processing playback data and the ADC path for processing audio acquisition data.

3.4.1 DAC Path

DAC path audio data comes from memory, and AUDPRC supports up to four channels of 24bit audio data. The DAC path in AUDPRC supports sampling rate conversion for two channels of data. The sampling rate conversion range is 1/8~8 times, and the singal-to-noise ratio is not less than 96dB. After the converted data is mixed with data of the other two channels, it enters the 10-level audio equalizer, the parameters of which can be configured by users according to needs. Finally, the two-channel audio data passing through the equalizer can be sent to the analog DAC module or the I2S interface as output.

3.4.2 ADC Path

ADC path audio data comes from analog ADC or the I2S interface, and supports up to two channels of 24bit audio data. The data through the sampling rate conversion module can be stored in memory by DMA.

©2026 SiFli Technologies (Nanjing) Co., Ltd. www.sifli.com

3.5 I/O Peripherals

3.5.1 General Purpose Input/ Output (GPIO)

The system supports up to 120 GPIOs. Different functions can be assigned to these pins by configuring the corresponding registers.

When configured as an output function, the output value can be configured through the register.

When configured as an input function, the input value can be queried through the corresponding register, and support the input signal interrupt trigger at the same time. The interrupt trigger mode can be set to level trigger and edge trigger, which includes upper and lower dual-edge trigger.

3.5.2 Universal Asynchronous Receiver/Transmitter (UART)

The Universal Asynchronous Receiver/Transmitter (UART) supports full-duplex mode and offers baud rates up to 6Mbps and a variety of configurable data formats, providing a flexible and efficient means of data interaction for communication with external standardized devices. It also supports DMA for multi-packet transceiving.

UART1、UART2 and UART3 are located in HPSYS。UART4、UART5 and UART6 are located in LPSYS。

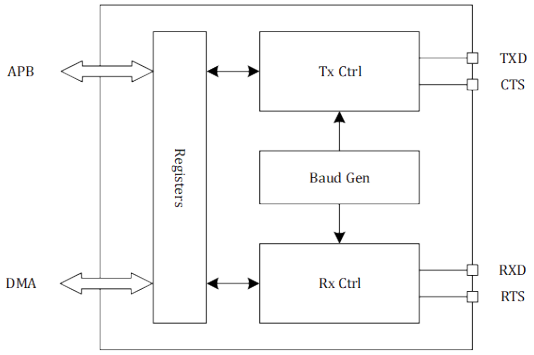

Figure 3-1: UART

Main features of UART:

- Full-duplex asynchronous communication
- Configurable 16 times oversampling or 8 times oversampling, select frequency priority or clock tolerance priority
- Flexible baud rate configuration, when the input clock is 48MHz and the oversampling rate is 16, the baud rate is 3Mbps
- Configurable packet length (7/8/9 bits)
- Configurable stop bit (1/2 bits)
- Hardware flow control (CTS/RTS)
- DMA multi-packet sending and receiving
- Receiving parity check and sending parity generation
- Receiving and sending interrupts, and other error interrupts

Baud rate calculation instructions

©2026 SiFli Technologies (Nanjing) Co., Ltd. www.sifli.com

Assuming that the input clock is fixed at 48MHz, the baud rate calculation formula is as follows:

$$Baud\ Rate = \frac{48MHz}{(BRR_{INT} + \frac{BRR_{FRAC}}{16})(16\ or\ 8)} \tag{3.1}$$

3.5.3 I2C

The I2C (Inter-Integrated Circuit) interface supports both the roles of master and slave. It can be used as a master to communicate with I2C slave peripherals, or as a slave to respond to an external I2C master. I2C has a built-in 8-byte FIFO, which can perform single read and write, or batch data read and write through DMA. I2C supports standard mode, fast mode, fast mode plus, and high-speed mode, with a maximum speed of 3.4Mbps.

Main features of I2C:

- Can be used as master and slave at the same time
- Support bus multi-master
- Support standard mode (up to 100kbps)
- Support fast mode (up to 400kbps)
- Support fast mode + (up to 1Mbps)
- Support high-speed mode (up to 3.4Mbps)
- As a master, it supports access to 7-bit or 10-bit addressing
- As a slave, it supports access to 7-bit addressing
- Configurable bus timing
- Support clock stretching
- 8-byte FIFO, support DMA
- Configurable digital anti-jitter circuit
- Independent functional clock, support system clock dynamic adjustment

3.5.4 PDM

The PDM (Pulse Density Modulation) interface is mainly used to convert the PDM audio signal captured by the PDM microphone into PCM (Pulse Code Modulation) signal for subsequent audio processing.

Main features of PDM:

- Support left and right stereo signals at the same time, and can also collect mono signals separately
- Available PDM microphone clock rates: 3.072MHz, 1.536MHz, 0.768MHz, 1.024MHz, 2.4MHz, 1.6MHz, 0.8MHz
- Support PCM data rates: 48kHz, 32kHz, 24kHz, 16kHz, 12kHz, 8kHz
- Support 32bit, 24bit, 16bit and 8bit PCM signals
- Support resolution of 0.5dB and gain adjustable from -15dB to 45dB

3.5.5 I2S

The I2S interface is used for audio input and output, and can be used to connect external audio chips, digital microphones and other devices. Compared with the analog audio interface, the I2S digital audio interface has a better anti-interference ability and a more streamlined interface protocol.

Main features of I2S:

©2026 SiFli Technologies (Nanjing) Co., Ltd. www.sifli.com

- Support both master and slave modes
- Support full duplex mode
- Configurable I2S data format, including left-justified, right-justified and standard format
- Support multiple audio data formats, including 8-bit and 16-bit mono and stereo formats
- Configurable I2S PCM signal bit width, up to 24-bit

3.5.6 Serial Peripheral Interface (SPI)

The SPI supports 3 communication formats: SSP/ SPI/ Microwire. SSP/ SPI is a full-duplex communication protocol, and the controller can be configured in Master or Slave mode. Microwire is a half-duplex communication protocol, and the controller can only be configured in Master mode. The SPI controller has a built-in transmit/receive FIFO. The transmit FIFO and the receive FIFO share the same address. The receive FIFO is accessed when the address is read, and the transmit FIFO is accessed when the address is written. SPI1/ SPI2 are located in HPSYS, and SPI3/ SPI4 are located in LPSYS.

The features of SPI are as follows:

- Support 8 to 32Bit data width
- In SPI format, the clock polarity and phase can be set by register SPO and SPH
- Chip select signal polarity can be configured
- FIFO depth can be set to 32Bits×16Entry or 4Bits/ 8Bits×32Entry
- Both receive and transmit support DMA mode
- The maximum clock frequency of SPI in HPSYS is 48MHz; the maximum clock frequency of SPI in LPSYS is 24MHz

The working sequences of various communication formats are as follows:

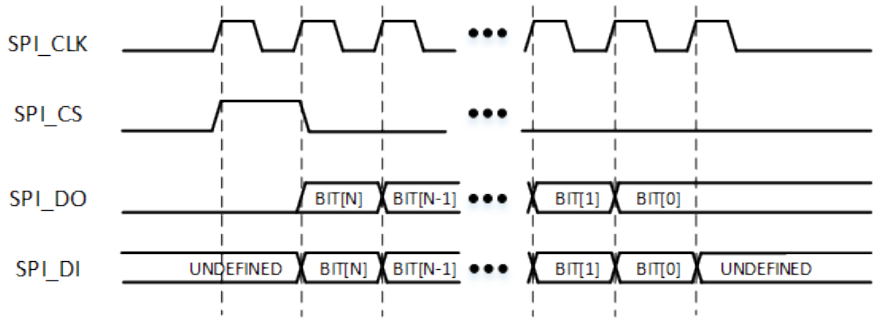

Figure 3-2: Single Transmit and Receive Sequence of SSP Format

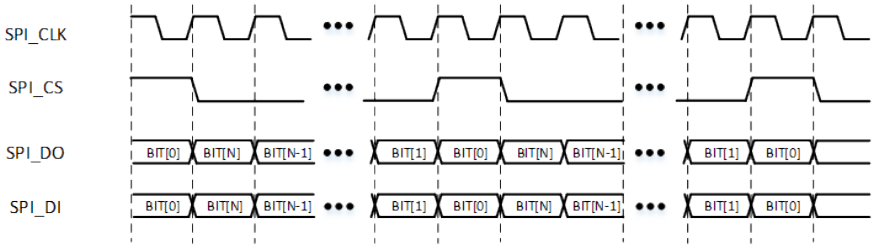

Figure 3-3: Continuous Transmit and Receive Sequence of SSP Format

©2026 SiFli Technologies (Nanjing) Co., Ltd. www.sifli.com

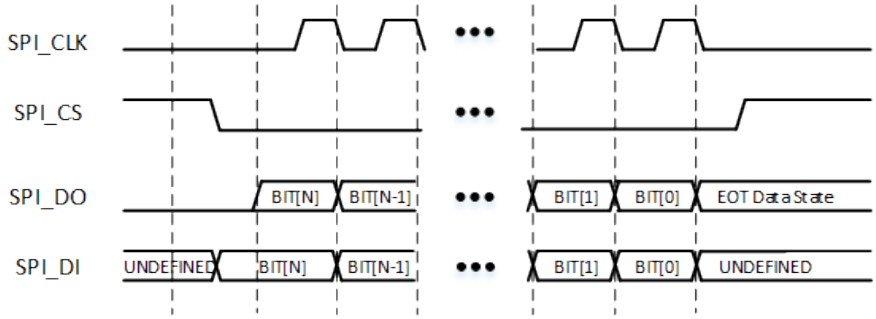

Figure 3-4: Single Transmit and Receive Sequence of SPI Format

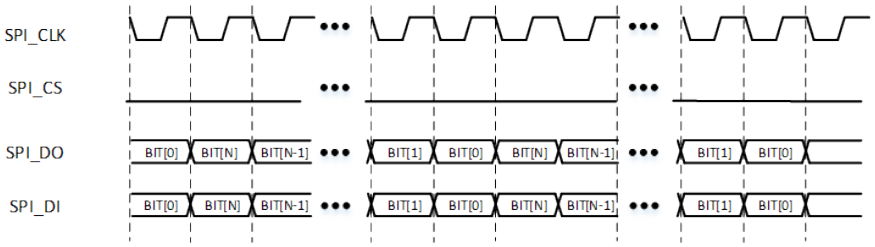

Figure 3-5: Continuous Transmit and Receive Sequence of SPI Format

The following figures illustrate the effect of SPH/SPO settings in SPI format:

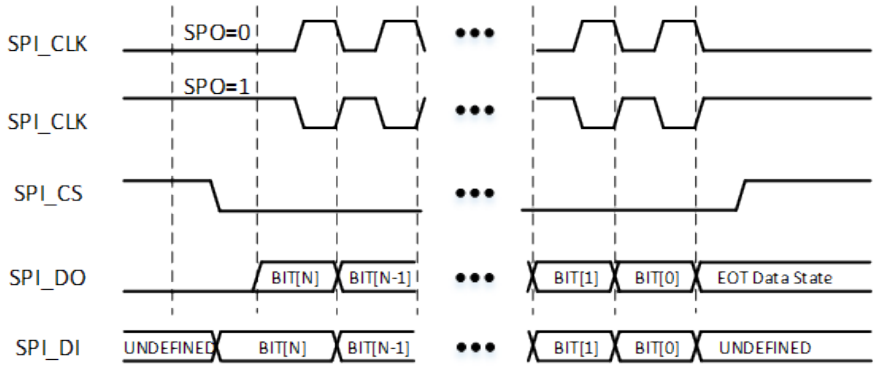

Figure 3-6: SPI Sequence at SPH=0

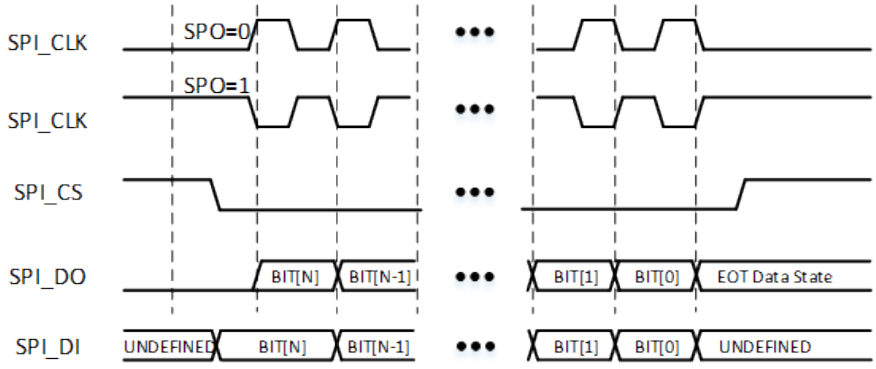

Figure 3-7: SPI Sequence at SPH=1

©2026 SiFli Technologies (Nanjing) Co., Ltd. www.sifli.com

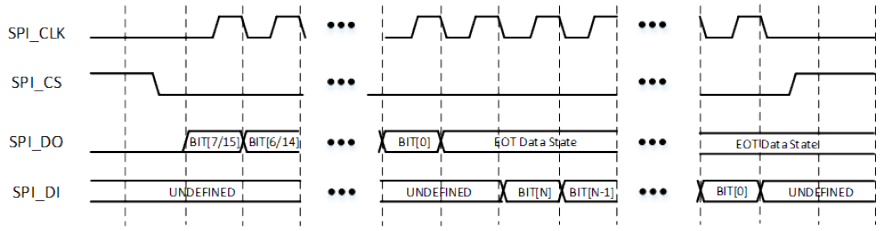

Figure 3-8: Single Transmit and Receive Sequence of Microwire Format

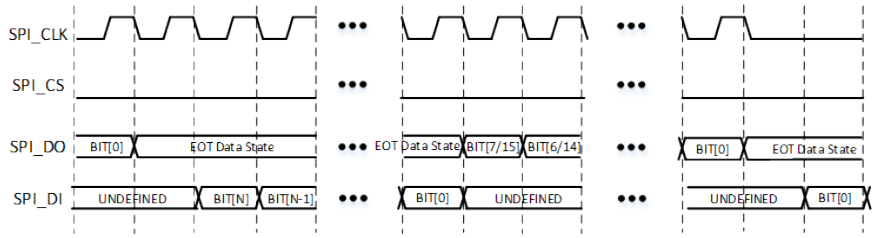

Figure 3-9: Multiple Transmit and Receive Sequence of Microwire Format

3.5.7 Peripheral Task Controller (PTC)

The PTC (Peripheral Task Controller) is a stand-alone peripheral controller, which can automatically complete the mutual scheduling and control tasks of each peripheral without waking up the CPU. Based on the event triggering of the selected peripherals, the PTC can automatically rewrite the working mode or working state of each peripheral, and can chain these tasks together to form an automatically triggered task sequence, thus completing a complex and fast response task chain. In the process of the task chain, the CPU can stay asleep all the time, thereby effectively saving power.

The PTC has a total of 8 channels, independent trigger source can be selected for each channel and independent task can be can be configured. The tasks that can be performed include two types: write the specified data directly to the specified address; read out the contents of the specified address, perform XOR/ and/ or/ addition with the specified data and then write it back. When the task of each channel is completed, a trigger signal can be generated to trigger the tasks of other channels. The number of triggers can be configured for each channel. Some channel support a configurable delay before executing the task after triggering.

PTC1 is located in HPSYS, and PTC2 is located in LPSYS. Both of them can control the peripherals on HPSYS bus and LPSYS bus.

Main features of PTC:

- 8 independently configured channels can work at the same time
- Each channel trigger can be selected from 128 trigger sources, including PTC's own trigger sources
- Access to AHB and APB peripheral address space, word-aligned access only
- Support directly writing data, or rewriting after reading
- Support 32-bit XOR/ and/ or/ addition operations
- Configurable trigger times 1 ~ 1023, or unlimited trigger times
- Configurable trigger delay 0 ~ 65535 HCLK cycles
- Fixed priority arbitration, the smaller the channel number, the higher the priority
- The register space of 4 words is used for data cache

©2026 SiFli Technologies (Nanjing) Co., Ltd. www.sifli.com

3.5.8 USB2.0 FS

This chip integrates a full-speed (FS) USB 2.0 Host/Device interface with the following functions.

- Software configurable endpoint settings, support suspend/ resume
- Support dynamic FIFO size
- Support session request protocol and host negotiation protocol
- Support full speed and slow speed modes
- On-chip integrated USB2.0 FS PHY

3.5.9 SIM Card Controller

The SIM card interface is a half-duplex serial interface. The SIM card controller in this chip supports the sending and receiving of SIM card data packet. The controller can support polling mode and DMA mode. Combined with the upper software, the protocol layer communication function of SIM card can be realized.

3.6 Timers

3.6.1 General-Purpose Timer

The GPTIM (General-Purpose Timer) is based on a 16-bit counter, and can realize functions such as timing, measuring the pulse length of the input signal (input capture) or generating output waveforms (output comparison and PWM). The counter itself can count up, down or up/down. The counting clock can be the system PCLK, IO input signal or cascaded input signal, and can be prescaled from 1 to 65536 times. The GPTIM has 4 channels in total, which can be independently configured as input capture or output mode. The results of counting, input capture and output comparison can generate interrupts, DMA requests or PTC events. The GPTIM has a Master-Slave Mode interface, which can be multi-level cascaded to realize functions such as multi-level counting or synchronous triggering.

Main features of GPTIM:

- 16-bit increment, decrement, increment/ decrement auto-reload counter, the maximum count is 65535
- 16-bit programmable (can be modified in real time) prescaler, the clock division is any value between 1~65536
- 8-bit configurable repeat count
- Support One Pulse Mode (OPM), the counter will stop automatically when the repeated counting is completed
- 4 independent channels, which can be configured as input or output modes respectively
- Input mode
  - Rising edge/ falling edge capture
  - PWM pulse width and period capture (requires two channels)
  - Optional one of 4 input ports or 1 external trigger port, supporting anti-jitter filtering and pre-frequency reduction
- Output mode
  - Forced output high/ low level
  - Output high/ low/ toggle level when counting to the comparison value
  - PWM output, pulse width and period can be configured
  - Multi-channel PWM combined output to generate multiple PWMs with interrelationships
  - Single pulse/ retrigger single pulse mode output

©2026 SiFli Technologies (Nanjing) Co., Ltd. www.sifli.com

- Master-Slave Mode
  - Support multi-counter interconnection, which can be used as a slave device to be controlled by external input or other master devices while generating control signals as a master device
  - Control modes include reset, trigger, gate control, etc.
  - Support synchronous start and reset of multiple counters
- Encoding mode input, control the incremental/ decremental counting of the counter
- An interrupt/ DMA request/ PTC trigger is generated when the following events occur:
  - Update: Counter increment overflow /decrement overflow, counter initialization (by software or internal/external trigger)
  - Trigger event (counter start, stop, initialization or counting triggered internally/ externally)
  - Input capture
  - Output comparison

3.6.2 Advanced Timer

The ATIM (Advanced Timer) is based on a 32-bit counter, and can realize functions such as timing, measuring the pulse length of the input signal (input capture) or generating output waveforms (output comparison and PWM). ATIM supports 6 complementary PWM outputs with dead zone protection, multiple PWMs with simultaneous phase change, and 2 brake inputs to quickly switch the outputs to a safe state. The counter itself can count up, down or up/down. The counting clock can be the system PCLK, IO input signal or cascaded input signal, and can be prescaled from 1 to 65536 times. The ATIM has 6 channels in total, which can be independently configured as input capture or output mode. The results of counting, input capture and output comparison can generate interrupts, DMA requests or PTC events. The ATIM has a Master-Slave Mode interface, which can be multi-level cascaded to realize functions such as multi-level counting or synchronous triggering.

Main features of ATIM:

- 32-bit increment, decrement, increment/ decrement auto-reload counter
- 16-bit programmable (can be modified in real time) prescaler, the clock division is any value between 1~65536
- 16-bit configurable repeat count
- Support One Pulse Mode (OPM), the counter will stop automatically when the repeated counting is completed
- 6 independent channels
  - Channel 1~3 can be configured as input or output modes respectively, each channel can output 2 complementary PWMs with dead zone protection
  - Channel 4 can be configured to input or output mode, it can output single PWM
  - Channel 5 and 6 can be configured to output comparison mode
- Input mode
  - Rising edge/ falling edge capture
  - PWM pulse width and period capture (requires two channels)
  - Optional one of 4 input ports or 1 external trigger port, supporting anti-jitter filtering and pre-frequency reduction
- Output mode
  - Forced output high/ low level
  - Output high/ low/ toggle level when counting to the comparison value
  - PWM output, pulse width and period can be configured
  - Multi-channel PWM combined output to generate multiple PWMs with interrelationships

©2026 SiFli Technologies (Nanjing) Co., Ltd. www.sifli.com

  - Single pulse/ retrigger single pulse mode output
- Master-Slave Mode
  - Support multi-counter interconnection, which can be used as a slave device to be controlled by external input or other master devices while generating control signals as a master device
  - Control modes include reset, trigger, gate control, etc.
  - Support synchronous start and reset of multiple counters
- Encoding mode input, control the incremental/ decremental counting of the counter
- Support Hall sensor circuit for positioning
- 2 brake inputs with anti-jilter filter to quickly place the outputs in a safe state. The brake singal sources include
  - CPU lockup
  - External input
  - Software trigger
- An interrupt/ DMA request/ PTC trigger is generated when the following events occur:
  - Update: Counter increment overflow /decrement overflow, counter initialization (by software or internal/external trigger)
  - Trigger event (counter start, stop, initialization or counting triggered internally/ externally)
  - Input capture
  - Output comparison
  - Brake
  - Phase change

3.6.3 Basic Timer

The BTIM (Basic Timer) is based on a 32-bit incremental counter and can realize the timing function. The counter clock can be the system PCLK or cascaded input signal, and can be prescaled from 1 to 65536 times. The timing results can generate interrupts, DMA requests, or PTC events. The BTIM has a Master-Slave Mode interface, which can be multi-level cascaded to realize functions such as multi-level counting or synchronous triggering.

Main features of BTIM:

- 32-bit incremental auto-reload counter
- 16-bit programmable prescaler, the clock division is any value between 1~65536
- Support One Pulse Mode (OPM), the counter will stop automatically when the counting is completed
- Master-Slave Mode
  - Support interconnection with BTIM and GPTIM, which can be used as a slave device to be controlled by external input or other master devices while generating control signals as a master device
  - Control modes include reset, trigger, gate control, etc.
  - Support multiple timers to start and reset simultaneously
- Interrupt, DMA request and PTC trigger will be generated in case of counter overflow or initialization

3.6.4 Low-Power Timer

The LPTIM (Low-Power Timer) is based on a 24-bit incremental counter, and can realize functions such as timing, generating output waveform (output comparison and PWM), and waking up the system. The counter clock can be the system clk, low-power clock, IO input signal or comparator output, and can be prescaled up to 128 times and cycle counting up to 256 times. Depending on the counting results, the PWM output as well as the interrupt can be

©2026 SiFli Technologies (Nanjing) Co., Ltd. www.sifli.com

generated,or the wake-up signal can be generated to wake up the system from the low-power mode. When the IO input signal is used as the count clock, it supports counting independent of the internal clock and generates the wake-up signal, allowing the system to turn off the internal clock.

Main features of LPTIM:

- 24-bit upward automatic reload counter, the maximum count is 16777215 (2^24-1)
- Counting clock selection
  - Internal clock, PCLK2 or low-power clock
  - IO input signal or comparator output with selectable edges, can use the internal clock for anti-jitter, and can also count independently without relying on the internal clock
- 8-level prescaling, clock division is 0 to the 7th power of 2
- 1~256 cycles
- Counting mode
  - Continuous counting mode
  - One Pulse Mode, counting ends after the number of cycles is completed
- Configurable polarity output mode
  - PWM output, can be configured with pulse width and period
  - Single toggle output
  - Single pulse or specified number of pulse output
- Trigger mode
  - Software trigger
  - IO input signal edge trigger, support anti-jitter filtering
- Timeout detection, the counter will be reset on each external trigger
- The interrupt or wake-up signal will be generated when the following events occur:
  - Update
  - Counter overflow
  - Output comparison
  - External trigger

3.6.5 Watchdog

The watchdog timer, as a counter, is mainly used to reset the system after the set time is reached to prevent the software from hanging up.

Basic functions of watchdog timer:

- Support two working modes:
  - Mode0
    - wdt will not generate interruption, and will reset the system directly after the set time is reached
    - Support up to 24-bit counter
  - Mode1
    - Divided into two periods. After reaching the set time of the first period, the interrupt will be generated. After reaching the set time of the second period, the system will be reset
    - Support up to 24-bit counter for each period
- Support write protection to prevent software from misoperation of wdt

©2026 SiFli Technologies (Nanjing) Co., Ltd. www.sifli.com

3.7 Encryption

3.7.1 AES

The AES accelerator is an arithmetic accelerator for symmetric encryption algorithms. Users can configure the encryption and decryption algorithm keys and initial vectors to perform encryption and decryption operations on the data in the memory, and store the results in the designated memory area.

Compared with software encryption and decryption, the AES accelerator has higher computing speed, more flexible configuration, and better access efficiency to peripheral storage devices. In addition, in bypass mode, the AES accelerator can also be used as a DMA for data transmission.

Features of AES:

- Support AES-128, AES-192, AES-256 and State Secrets SM4 algorithm standard
- Support ECB, CTR and CBC modes
- RootKey can be called to perform encryption and decryption operations, while ensuring that RootKey cannot be read by external programs

3.7.2 HASH

HASH is an operational accelerator for hash sequence algorithms. User can choose different hash algorithms to calculate the hash values of specific data in memory. HASH is faster than the software algorithm, and the configuration is also flexible. Users can also customize the initial vector to achieve multi-threaded HASH operations. The algorithms supported by HASH include SHA1, SHA224, SHA256 and SM3.

3.7.3 CRC

The CRC (Cyclic Redundancy Check) can perform CRC calculations with a specific bit width, any generated polynomial, and any initial value. Data can be input via CPU or DMA with a minimum input unit of a single byte and no maximum byte limit. A single HCLK cycle is sufficient for a single byte input calculation. The check result will be obtained instantly after all data inputs are completed. It supports input data high/ low bit reversal and output data high/ low bit reversal. It supports input data with different valid bit widths.

Features of CRC:

- 7/8/16/32-bit CRC calculation
- Any custom polynomial
- Any initial value
- Supports single byte/ double byte/ triple byte/ quadruple byte valid bit width for input data
- Supports byte/ double byte/ quadruple byte high and low bit reversal for input data
- Supports high and low bit reversal for output data
- Calculation speed is 1 byte per HCLK cycle

©2026 SiFli Technologies (Nanjing) Co., Ltd. www.sifli.com

3.7.4 True Random Number Generator (TRNG)

The TRNG (True Random Number Generator) is a module that generates random numbers based on the instability of oscillation circuits. No external random entropy source is required for this module, and the random numbers can be generated by activating multiple internal oscillation circuits with a certain entropy source processing logic.

Features of TRNG:

- Independent internal entropy source
- Generate 256-bit seeds and 256-bit random numbers in a single pass
- Deadlock check against entropy source

3.8 Memory Interfaces

3.8.1 MPI

MPI (Memory Peripheral Interface) controller is a dedicated memory communication interface which supports a variety of off-chip memory particles, including:

- SPI NOR Flash, support 1-wire/ 2-wire/ 4-wire, support DTR mode
- SPI NAND Flash, support 1-wire/ 2-wire/ 4-wire
- pSRAM, support x8 and x16 data width, support Xccela standard interface, compatible with Legacy interface
- HyperRAM, support x8 and x16 data width, support HyperBus standard interface

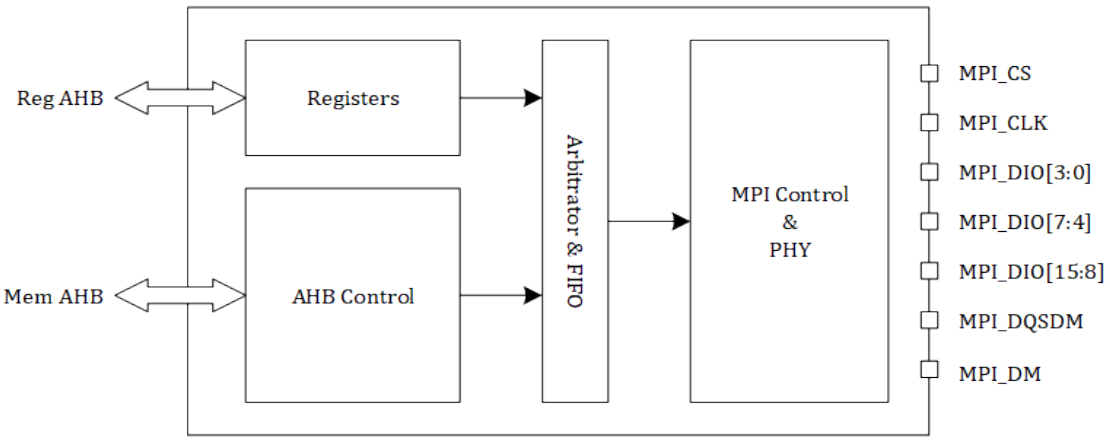

Figure 3-10: MPI Controller Block Diagram

The MPI controller supports two modes of operation: (1) register mode and (2) address-mappping mode. The switching between the two modes is automatically completed by the hardware and can be dynamically interspersed for execution. In either mode, highly customizable interface timing is supported for compatibility with various memory particles.

Register Mode:

- Send a command timing via register operation. The command can also be set as a status query command to be sent repeatedly until the read back data meets a preset status
- Support sending a sequence of two command timings, the second of which can be set as a status query command to be sent repeatedly until the read back data meets a preset status

©2026 SiFli Technologies (Nanjing) Co., Ltd. www.sifli.com

- Support DMA channels, data handling is completed through the register FIFO interface

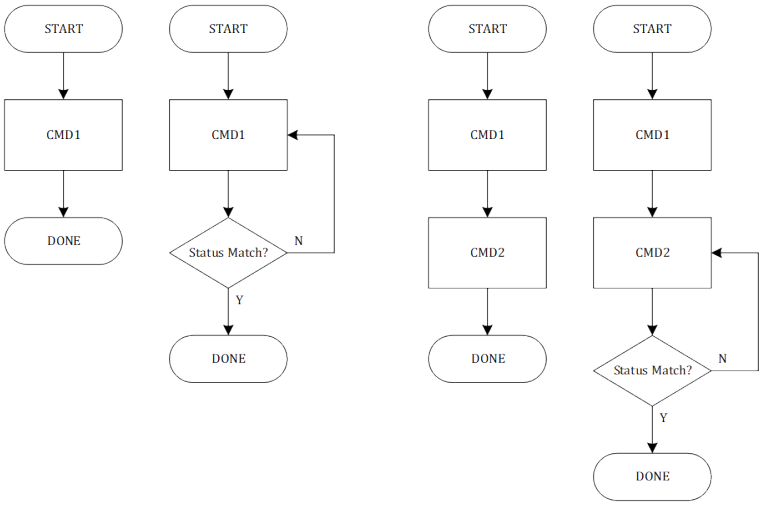

Figure 3-11: Sequence of Single and Multiple Command Timings in Register Mode

Address mapping mode:

- Map the external memory to the AHB address space, and convert the bus read and write to the preset Memory interface timing, realize XIP function
- Support Byte (8-bit), Half-word (16-bit) and Word (32-bit) AHB access
- Efficient conversion of AHB Wrap operations, independent of whether the particles support Wrap or not
- Support XIP real-time (On-The-Fly) decryption, the mode is AES128-CTR or AES256-CTR
- Support continuous read and write function, if the read and write address of the current AHB is continuous with the previous one, the data transmission will be started directly, and the command and address part will be omitted. This feature can greatly increase the effective bandwidth when handling large blocks of data.
- For the internal dynamic refresh feature of pSRAM and HyperRAM, the maximum CS pull-down time of particles, the nearest CS access interval, the maximum burst data length and other restrictions are automatically processed without software processing.

3.8.2 SD/SDIO/eMMC

SDMMC1 supports SD protocol 3.0 and eMMC standard 4.51, and can be used as a HOST controller to interact with SD/SDIO/eMMC devices. SDMMC1 has a built-in chained DMA controller and 1K byte FIFO, which can read and write data independently, supporting block data handling. SDMMC1 supports SDR single-wire, 4-wire and 8-wire modes, and supports DDR 4-wire and 8-wire modes.

Features of SDMMC1:

- Compatible with SD Host Controller Standard Specification Version 3.0
- Compatible with SD 3.0 Physical Layer Specification Version 3.01
- Compatible with SDIO Specification Version 3.0
- Compatible with JEDEC JESD84-B451 eMMC 4.51 Specification
- Support SDSC/SDHC/SDXC/SDHS card
- Support UHS-1: SDR12/SDR25/SDR50/SDR104/DDR50
- Support SDR single-wire, 4-wire and 8-wire modes

©2026 SiFli Technologies (Nanjing) Co., Ltd. www.sifli.com

- Support DDR 4-wire and 8-wire modes
- Built-in 1K byte FIFO, support up to 512 bytes in a single block
- Configurable clock
- Support chained DMA

SDMMC2 supports SD protocol 3.0 and eMMC standard 4.51, which can interact with SD/SDIO/eMMC devices, and read and write data via DMAC. SDMMC2 supports SDR single-wire and 4-wire modes.It does not support DDR.

Features of SDMMC2:

- Compatible with SD Host Controller Standard Specification Version 3.0
- Compatible with SD 3.0 Physical Layer Specification Version 3.01
- Compatible with SDIO Specification Version 3.0
- Compatible with JEDEC JESD84-B451 eMMC 4.51 Specification
- Support SDSC/SDHC/SDXC/SDHS card
- Support SDR12/SDR25/SDR50
- Support SDR single-wire, 4-wire modes
- Built-in 21K byte FIFO, support up to 512 bytes in a single block
- Configurable clock
- Cooperate with DMAC for migration

3.9 CAN

CAN (Controller Area Network) is compatible with CAN protocol 2.0b, but not support CAN FD. CAN has configurable base transmission rate, internal receiving FIFO and transmitting FIFO, supporting multi-frame auto-transmitting/receiving, auto-retransmission, preemptive transmission and other functions. CAN includes configurable receiving ID auto-filters that retain filtered frames only in the receiving FIFO. When abnormal bus and transmitting/receiving are detected, CAN has a complete error notification mechanism.

Features of CAN:

- Compatible with CAN 2.0b, not support CAN FD
- Configurable data rate to 1Mbps
- Support basic frames and extended frames
- The frame data length can be up to 8 bytes
- Receiving FIFO depth 7, transmitting FIFO depth 7+1
- 16 configurable ID filters
- Support frame preemptive transmitting
- Error detection and notification mechanism

©2026 SiFli Technologies (Nanjing) Co., Ltd. www.sifli.com

3.10 Summary of Peripheral Interface Rates

Table 3-2: Common Interface Rates

Controller	Max. Rate	Unit	Remarks
MPI1	144	MHz	SiP OPI/HPI-PSRAM
MPI2	144	MHz	SiP OPI/HPI-PSRAM
MPI3	96	MHz	External QSPI-NOR, QSPI-NAND Flash
MPI5	48	MHz	SiP QSPI-NOR, DTR
SDMMC	96	MHz	External eMMC
I2C	3.4	MHz	
SPI1/2	48	MHz	
SPI3/4	8	MHz	
UART	3	Mbaud	
I2S	48	KHz	Sampling rate 48KHz, 32-bit×2 channel
PDM	3.072	MHz	
CAN	1	MHz	
GPADC	4	Msps	
SDADC	4	Ksps	

©2026 SiFli Technologies (Nanjing) Co., Ltd. www.sifli.com

4 Electrical Characteristics

4.1 Basic Electrical Characteristics

Table 4-1: Operating Conditions

Symbol	Description	Min	Typ	Max	Unit
VDD	Power supply voltage from external source	1.7	3.3	3.6	V
T_{amb}	Ambient temperature	-40		85	°C
V_{IL}	CMOS low level input voltage	0		$0.3\times V_{IO}$	V
V_{IH}	CMOS high level input voltage	$0.7\times V_{IO}$		V_{IO}	V
V_{TH}	CMOS threshold voltage		$0.5\times V_{IO}$		V

Table 4-2: Absolute Max. Ratings

Symbol	Description	Min	Typ	Max	Unit
VDD	Power supply voltage from external source			3.6	V
$T_{Storage}$	Storage temperature	-40		125	°C
V_{IN}	Input voltage	0		V_{IO}+0.3	V
V_{LNA}	LNA input level			0	dBm
I_{IN}	Input current			20	mA

Table 4-3: I/O characteristics @3.3V

Symbol	Description	Min	Typ	Max	Unit
C_{IN}	pipe foot capacitor	2.5	3	3.5	pF
V_{IH}	high-level input voltage	0.7*VDDIOA	-	VDDIOA	V
V_{IL}	low-level input voltage	VSS	-	0.3*VDDIOA	V
I_{IH}	high-level input current	-	10	40	nA
I_{IL}	low-level input current	-	10	40	nA
V_{OH}	high-level output voltage (high-resistance load)	0.8*VDDIOA	-	VDDIOA	V
V_{OL}	low-level output voltage (high-resistance load)	VSS	-	0.2*VDDIOA	V
I_{OH}	high-level driving current (V_{OH}=0.8*VDDIOA,max driver)	12	30	38	mA
I_{OL}	low-level driving current (V_{OH}=0.2*VDDIOA,max driver)	12	30	38	mA
R_{PU}	internal pull-up resistance	7	10	20	kΩ
R_{PD}	internal pull-down resistance	7	10	20	kΩ
V_{IH_nRST}	chip reset release voltage	0.7*VDD	-	VDD	V
V_{IL_nRST}	chip reset voltage	VSS	-	0.3*VDD	V

©2026 SiFli Technologies (Nanjing) Co., Ltd. www.sifli.com

4.2 Reliability

Table 4-4: Reliability Test

Test Item	Test Condition		Applicable Product	Test Criteria
HTOL	125°C, 1000 hours		SF32LB56x QFN68L SF32LB56x BGA175	JESD22-A108
ESD	HBM（HUMAN BODY MODE）	± 5000 V	SF32LB56x QFN68L	JS-001-2017
		± 2000 V	SF32LB56x BGA175	JS-001-2017
	CDM（CHARGE DEVICE MODE）	±1000V	SF32LB56x BGA175	JS-002-2018
		±750V	SF32LB56x QFN68L	JS-002-2018
Latch-up	LU (LATCH-UP)	I-Test: ± 200mA	SF32LB56x QFN68L SF32LB56x BGA175	JESD78E
		OVT: +1.5×Vdd_{MAX}	SF32LB56x QFN68L SF32LB56x BGA175	
MSL3	Baking: 125°C, 24 hours Soaking: 30°C, 60% RH, 192 hours Reflow Soldering: 260 + 0°C, 20 seconds, 3 times		SF32LB56x QFN68L SF32LB56x BGA175	J-STD-020 JESD47 JESD22-A113
TCT	-65°C~150°C, 1000 cycles		SF32LB56x QFN68L SF32LB56x BGA175	JESD22-A104
uHAST	130°C, 85% RH, 96 hours		SF32LB56x QFN68L SF32LB56x BGA175	JESD22-A118
HTSL	150°C, 1000 hours		SF32LB56x QFN68L SF32LB56x BGA175	JESD22-A103
PCT	QFN: 121°C, 100% RH, 29.7PSI, 96 hours		SF32LB56x QFN68L	JESD22-A102
Solderability	QFN: 245±5°C, Aging 8 hours		SF32LB56x QFN68L	J-STD-002D-2013

©2026 SiFli Technologies (Nanjing) Co., Ltd. www.sifli.com

4.3 Power Consumption Characteristics

4.3.1 Processor Power Consumption

Table 4-5: Processor Power Consumption

Symbol	Conditions		@1.8V Current (mA)	@1.8V Current Increment (uA/MHz)	@3.8V Current (mA)	@3.8V Current Increment (uA/MHz)
CoreMark	HPSYS	240MHz	16.53	53.54	8.51	27.57
		192MHz	13.96		7.19	
	LPSYS	48MHz	1.465	24.79	0.75	12.76
		24MHz	0.87		0.45	
WhileLoop	HPSYS	240MHz	13.52	39.79	6.96	20.49
		192MHz	11.61		5.98	
	LPSYS	48MHz	1.086	16.88	0.56	8.69
		24MHz	0.681		0.35	
Shutdown	Key wake-up (sending shutdown)			252nA		
Shutdown	RTC wake-up (sending shutdown 5)			262nA		

* 1. The above power consumption of 3.8V supply voltage is calculated based on the test data of 1.8V and 3.3V power supply according to the efficiency (calculation formula: $I_{3.8V} = I_{1.8V} \times 1.8/90\%/3.8+I_{3.3V}$).

©2026 SiFli Technologies (Nanjing) Co., Ltd. www.sifli.com

4.3.2 BT & BLE Power Consumption

Table 4-6: BT & BLE Power Consumption

Mode	Condition	3.8V@TXpower 0dBm Typical Value	3.8V@TXpower 4dBm Typical Value	3.8V@TXpower 10dBm Typical Value	Unit
ΔBT Sniff Mode	50ms (attempt=1)	142.5	149.5	180.0	uA
	100ms (attempt=1)	71.3	74.8	90.0	uA
	200ms (attempt=1)	35.6	37.4	45.0	uA
	500ms (attempt=1)	14.3	15.0	18.0	uA
	1s (attempt=1)	7.1	7.5	9.0	uA
ΔBLE ADV	50ms	183.3	214.5	337.6	uA
	100ms	91.7	107.3	168.8	uA
	200ms	45.8	53.6	84.4	uA
	500ms	18.3	21.5	33.8	uA
	1s	9.2	10.7	16.9	uA
ΔBLE Connection	50ms	125.4	127.6	146.1	uA
	100ms	62.7	63.8	73.1	uA
	200ms	31.3	31.9	36.5	uA
	500ms	12.5	12.8	14.6	uA
	1s	6.3	6.4	7.3	uA
ΔScan	Inquiry Scan or Page Scan	54.2			uA
ΔBoth Scan	Inquiry Scan and Page Scan	108.4			uA
Standby		1.7			uA

* 1. Scan receives 28.82ms per 1.28s, Both Scan receives 57.64ms per 1.28s.

2. Power supply: PVDD + AVDD33_ANA

3. The above power consumption of 3.8V supply voltage is calculated based on the test data of 1.8V and 3.3V power supply according to the efficiency (calculation formula: $I_{3.8V} = I_{1.8V} \times 1.8/90\%/3.8+I_{3.3V}$).

4. Calculation example:

Standby mode bt 500ms sniff @TXpower10dBm： =18+1.7=19.7uA

bt 500ms sniff + ble 500ms connection @TXpower10dBm： =18+14.6+1.7=34.3uA

©2026 SiFli Technologies (Nanjing) Co., Ltd. www.sifli.com

4.4 Bluetooth RF

4.4.1 BLE RF

4.4.1.1 BLE Transmitter Characteristics

Table 4-7: BLE Transmitter Characteristics – 1Mbps

Parameter	Condition	Min	Typ	Max	Unit
Maximum RF transmit power			19		dBm
RF power control range		-20		19	dBm
Adjacent channel transmit power (@+19dBm)	F = F_0+2MHz		-27	-20	dBm
	F = F_0-2MHz		-27	-20	dBm
	F = F_0+3MHz		-31	-30	dBm
	F = F_0-3MHz		-31	-30	dBm
	F = F_0+>3MHz		-38	-30	dBm
	F = F_0->3MHz		-38	-30	dBm
Δf_{1avg} Maximum modulation		225	250	275	kHz
Δf_{2max} Minimum modulation		185	210		kHz
$\Delta f_{2avg}/\Delta f_{1avg}$		0.8	0.89		
ICFT		-150	±20	150	kHz
Drift rate		-20	±4	20	kHz/50us
Drift		-50	±4	50	kHz
Harmonic spur (@+19dBm transmit power)	Second harmonic		-50*		dBm
	Third harmonic		-40*		dBm

* With external π type matching network

Table 4-8: BLE Transmitter Characteristics – 2Mbps

Parameter	Condition	Min	Typ	Max	Unit
Maximum RF transmit power			19		dBm
RF power control range		-20		19	dBm
Adjacent channel transmit power (@+19dBm)	F = F_0+4MHz		-37	-20	dBm
	F = F_0-4MHz		-37	-20	dBm
	F = F_0+5MHz		-38	-20	dBm
	F = F_0-5MHz		-38	-20	dBm
	F = F_0+>5MHz		-42	-30	dBm
	F = F_0->5MHz		-42	-30	dBm
Δf_{1avg} Maximum modulation		450	500	550	kHz
Δf_{2max} Minimum modulation		370	420		kHz
$\Delta f_{2avg}/\Delta f_{1avg}$		0.8	0.89		
ICFT		-150	±20	150	kHz
Drift rate		-20	±4	20	kHz/50us
Drift		-50	±4	50	kHz
Harmonic Spur (@+19dBm transmit power)	Second harmonic		-50*		dBm
	Third harmonic		-40*		dBm

* With external π type matching network

©2026 SiFli Technologies (Nanjing) Co., Ltd. www.sifli.com

4.4.1.2 BLE Receiver Characteristics

Table 4-9: BLE Receiver Characteristics – 1Mbps

Parameter	Condition	Min	Typ	Max	Unit
Sensitivity with dirty off@30.8% PER & 37bytes		/	-100	/	dBm
Sensitivity with dirty on@30.8% PER & 37bytes		/	-99.3	/	dBm
Maximum received signal@30.8% PER		/	0	/	dBm
C/I co-channel			7		dB
Adjacent channel selectivity C/I	F = F_0+1MHz		-10		dB
	F = F_0-1MHz		-7		dB
	F = F_0+2MHz		-43		dB
	F = F_0-2MHz		-40		dB
	F = F_0+3MHz		-50		dB
	F = F_0-3MHz		-40		dB
	F = F_{image}(F_0-4MHz)		-24		dB
Out of band blocking performance	30MHz~2000MHz		-11		dBm
	2000MHz~2400MHz		-25		dBm
	2500~3000MHz		-25		dBm
	3000MHz~12.5GHz		-10		dBm
Intermodulation			-24		dBm

Table 4-10: BLE Receiver Characteristics – 2Mbps

Parameter	Condition	Min	Typ	Max	Unit
Sensitivity with dirty off@30.8% PER & 37bytes		/	-97	/	dBm
Sensitivity with dirty on@30.8% PER & 37bytes		/	-96.5	/	dBm
Maximum received signal@30.8% PER		/	0	/	dBm
C/I co-channel			7		dB
Adjacent channel selectivity C/I	F = F_0+2MHz		-10		dB
	F = F_0-2MHz		-8		dB
	F = F_0+4MHz		-44		dB
	F = F_0-4MHz		-34		dB
	F = F_0+6MHz		-50		dB
	F = F_0-6MHz		-24		dB
	F = F_{image}(F_0-6MHz)		-24		dB
Out of band blocking performance	30MHz 2000MHz		-11		dBm
	2000MHz-2400MHz		-25		dBm
	2500-3000MHz		-25		dBm
	3000MHz-12.5GHz		-10		dBm
Intermodulation			-25		dBm

©2026 SiFli Technologies (Nanjing) Co., Ltd. www.sifli.com

4.4.2 Classic Bluetooth

4.4.2.1 Transmitter Characteristics

Table 4-11: Transmitter Characteristics – Basic Data Rate

Parameter	Condition	Min	Typ	Max	Unit
Maximum RF transmit power			19		dBm
RF power control step		2	4	8	dB
Adjacent channel transmit power	F = F_0+2MHz		-37	-20	dBm
	F = F_0-2MHz		-37	-20	dBm
	F = F_0+3MHz		-41	-40	dBm
	F = F_0-3MHz		-41	-40	dBm
	F = F_0+>3MHz		-44	-40	dBm
	F = F_0->3MHz		-44	-40	dBm
Δf_{1avg} modulation		140	160	175	kHz
Δf_{2max} modulation		120	150	175	kHz
$\Delta f_{2avg}/\Delta f_{1avg}$		0.8	0.9		
ICFT		-75	0	75	kHz
Drift (1 slot packet)		-25	0	25	kHz
Drift (5 slot packet)		-40	0	40	kHz
Harmonic spur	3G-20GHz		-35		dBm

Table 4-12: Transmitter Characteristics – Enhanced Data Rate

Parameter	Condition	Min	Typ	Max	Unit
Maximum RF transimit power			13		dBm
DPSK Power - GFSK Power	2-DH5		0		dB
π/4 DQPSK max w_0		-10	0	10	kHz
π/4 DQPSK max w_i		-75	0	+75	kHz
π/4 DQPSK max $\|w_i + w_0\|$		-75	0	+75	kHz
8DPSK max w_0		-10	0	10	kHz
8DPSK max w_i		-75	0	+75	kHz
8DPSK max $\|w_i + w_0\|$		-75	0	+75	kHz
π/4 DQPSK modulation accuracy	RMS DEVM		6	20	%
	99% DEVM		11	30	%
	Peak DEVM		16	35	%
8DPSK modulation accuracy	RMS DEVM		6	13	%
	99% DEVM		11	20	%
	Peak DEVM		16	25	%
In-band spurious emissions	F=F_0+1MHz		-39	-26	dBm
	F=F_0-1MHz		-41	-26	dBm
	F=F_0+2MHz		-28	-20	dBm
	F=F_0-2MHz		-29	-20	dBm
	F=F_0+3MHz		-39*		dBm
	F=F_0-3MHz		-39*		dBm
	F=F_0+>3MHz		-40	-40	dBm
	F=F_0->3MHz		-40	-40	dBm
EDR differential phase encoding			99	100	%

* Exceptions in up to 3 bands are allowed. For exceptions, PTX $\leq$ -20dBm.

©2026 SiFli Technologies (Nanjing) Co., Ltd. www.sifli.com

4.4.2.2 Receiver Characteristics

Table 4-13: Receiver Characteristics – Basic Data Rate

Parameter	Condition	Min	Typ	Max	Unit
Sensitivity with dirty transmit off@0.1% BER		/	-96.3	/	dBm
Sensitivity with dirty transmit on@0.1% BER		/	-94	/	dBm
Maximum received signal@0.1% BER		0	/	/	dBm
C/I co-channel			10		dB
Adjacent channel selectivity C/I	F = F_0+1MHz		-13		dB
	F = F_0-1MHz		-10		dB
	F = F_0+2MHz		-42		dB
	F = F_0-2MHz		-43		dB
	F = F_0+3MHz		-48		dB
	F = F_0-3MHz		-45		dB
	F = F_{image}(F_0-5MHz)		-31		dB
Out of band blocking performance	30MHz~2000MHz	-10	-10		dBm
	2000MHz~2400MHz	-27	-10		dBm
	2500~3000MHz	-27	-10		dBm
	3000MHz~12.5GHz	-10	-10		dBm
Intermodulation			-22		dBm

Table 4-14: Receiver Characteristics – Enhanced Data Rate-π/4 DQPSK

Parameter	Condition	Min	Typ	Max	Unit
Sensitivity with dirty transmit off@0.01% BER		/	-95.5	/	dBm
Sensitivity with dirty transmit on@0.01% BER		/	-95	/	dBm
Maximum received signal@0.01% BER		/	0	/	dBm
C/I co-channel			11		dB
Adjacent channel selectivity C/I	F = F_0+1MHz		-13		dB
	F = F_0-1MHz		-9		dB
	F = F_0+2MHz		-35		dB
	F = F_0-2MHz		-31		dB
	F = F_0+3MHz		-41		dB
	F = F_0-3MHz		-41		dB
	F = F_{image}(F_0-5MHz)		-30		dB

Table 4-15: Receiver Characteristics – Enhanced Data Rate-8DPSK

Parameter	Condition	Min	Typ	Max	Unit
Sensitivity with dirty transmit off@0.01% BER		/	-88.5	/	dBm
Sensitivity with dirty transmit on@0.01% BER		/	-87	/	dBm
Maximum received signal@0.01% BER		/	0	/	dBm
C/I co-channel			17		dB
Adjacent channel selectivity C/I	F = F_0+1MHz		-4		dB
	F = F_0-1MHz		-5		dB
	F = F_0+2MHz		-29		dB
	F = F_0-2MHz		-29		dB
	F = F_0+3MHz		-39		dB
	F = F_0-3MHz		-39		dB
	F = F_{image}(F_0-5MHz)		-28		dB

©2026 SiFli Technologies (Nanjing) Co., Ltd. www.sifli.com

4.5 Audio Characteristics

Table 4-16: Audio ADC Characteristics

Analogue to Digital Converter under 3.3V

Parameter	Test Condition	Min	Typ	Max	Unit
Resolution		/	/	24	Bits
Sample Frequency		8	/	48	kHz
Analog Gain Range	1dB/Step	-20		10	dB
Input Resistance	Analog Gain = 0dB, @48kHz Sample Frequency	/	23	/	KΩ
Dynamic Range	1kHz -60dBFS Input, @48kHz Sample Frequency, Output A-Weighted	/	99	/	dB
Signal to Noise Ratio	1kHz Input, @48kHz Sample Frequency, Output A-Weighted	/	99	/	dB
Total Harmonic Distortion+Noise	Analog Gain = 0dB, 1kHz Input, @48kHz Sample Frequency	/	-80	/	dB

Table 4-17: Audio DAC Characteristics

Digital to Analogue Converter under 3.3V

Parameter	Test Condition	Min	Typ	Max	Unit
Resolution		/	/	24	Bits
Output Swing			0.9		Vrms
Sample Frequency		8	/	48	kHz
Total Harmonic Distortion+Noise	1kHz Output, 0dBFS, with 10kOhm Loading, @48kHz Sample Frequency, Output A-Weighted	/	-99	/	dB
Dynamic Range	1kHz Output, -60dBFS, with 10kOhm Loading, @48kHz Sample Frequency, Output A-Weighted	/	109	/	dB
Noise Floor		/	3.3	/	μV rms
Signal to Noise Ratio	1kHz Output, 0dBFS, with 10kOhm Loading, @48kHz Sample Frequency, Output A-Weighted	/	109	/	dB

4.6 IO Drive Strength

Table 4-18: IO Drive Strength @3.3V

DS1	DS0	Driving Capability
0	0	2mA
0	1	4mA
1	0	8mA
1	1	12mA

©2026 SiFli Technologies (Nanjing) Co., Ltd. www.sifli.com

5 Packaging and Hardware

5.1 Pin Layout

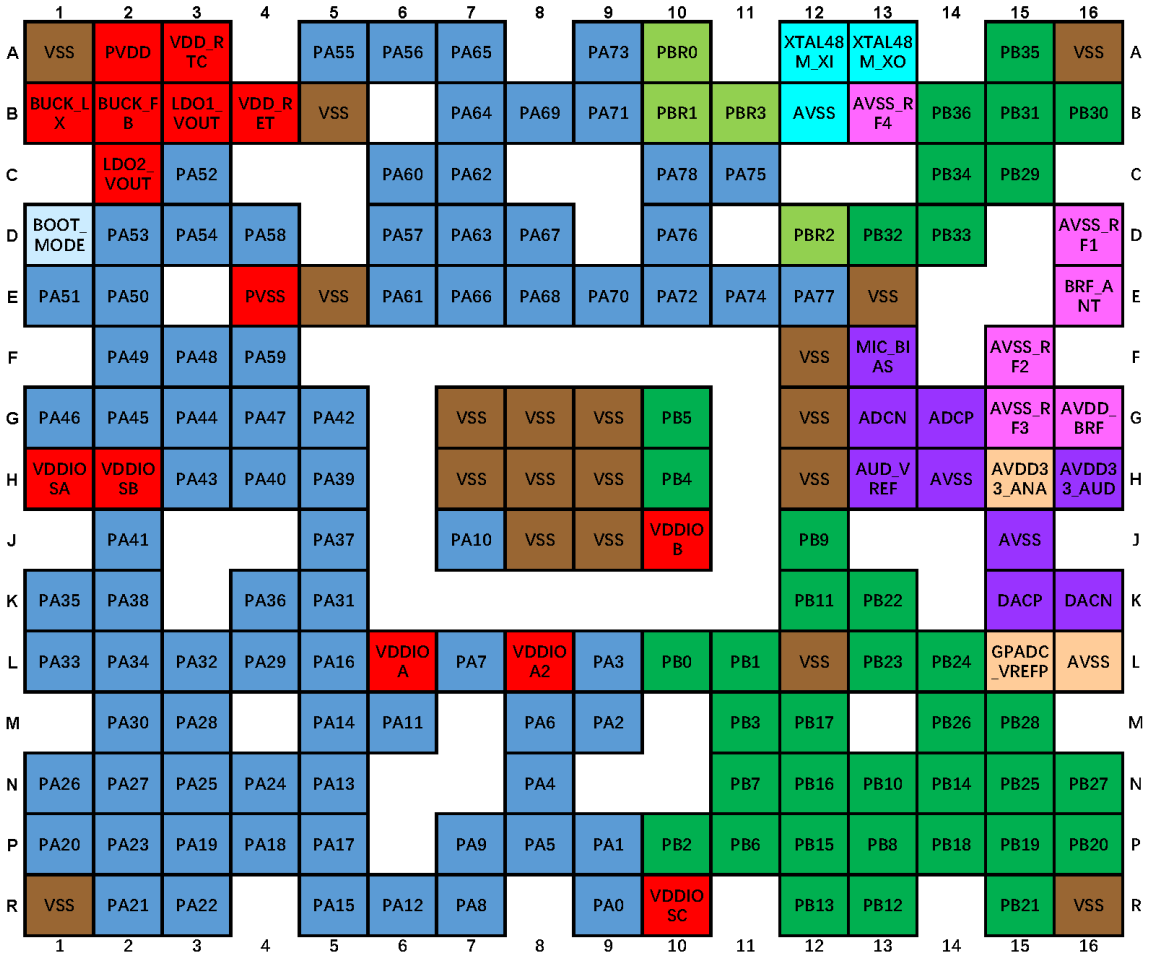

Figure 5-1: SF32LB565/SF32LB566/SF32LB567 (BGA175) Pin Layout (Top View)

©2026 SiFli Technologies (Nanjing) Co., Ltd. www.sifli.com

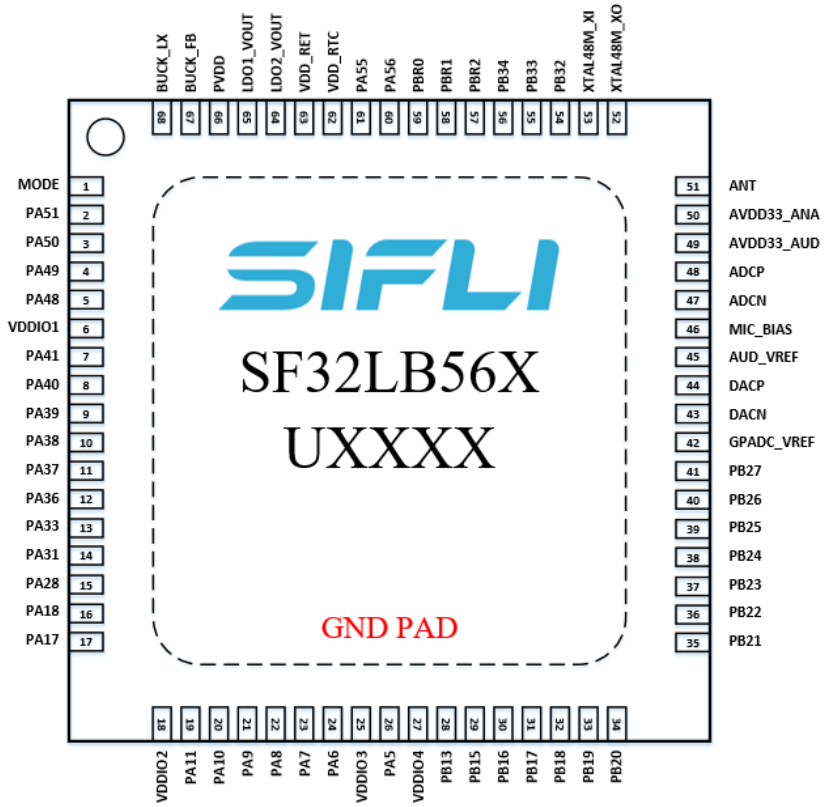

Figure 5-2: SF32LB561/SF32LB563 (QFN68L) Pin Layout

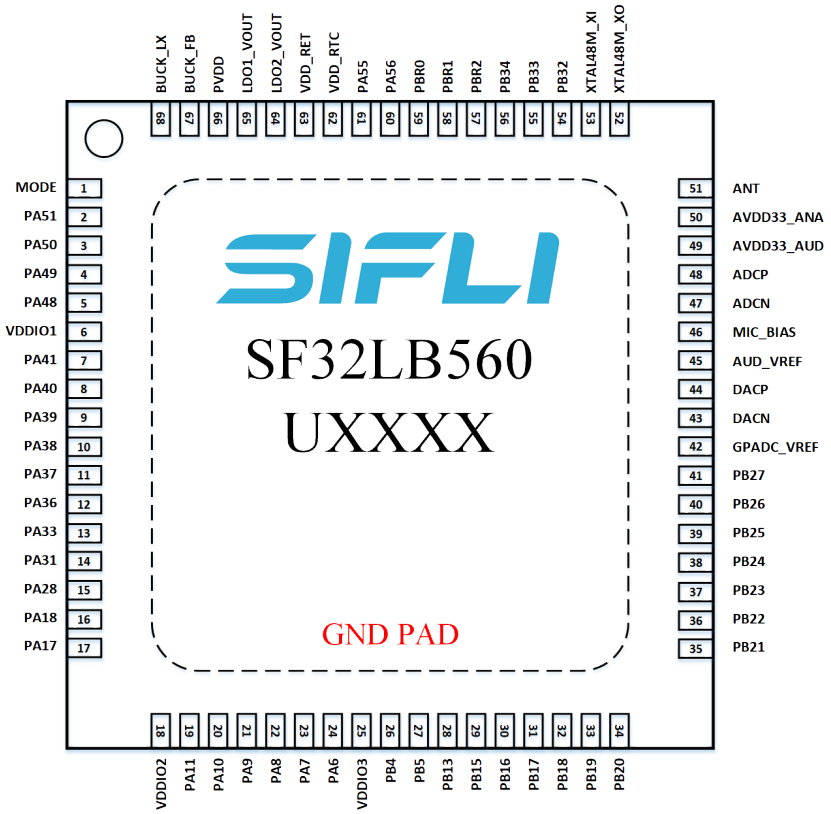

Figure 5-3: SF32LB560 (QFN68L) Pin Layout

©2026 SiFli Technologies (Nanjing) Co., Ltd. www.sifli.com

5.2 Pin Description

The pin types of this chip are shown in Table **??**, and the following text will describe the big core domain GPIO, LITTLE core domain GPIO and other dedicated pins respectively.

Table 5-1: Pin Types

Pin Type	Description
I/O	Digital input/output
I	Digital input
O	Digital output
A, I	Analog input
A, O	Analog output
A, I/O	Analog input/output
PWR	Power
GND	Ground

©2026 SiFli Technologies (Nanjing) Co., Ltd. www.sifli.com

5.2.1 Big Core Domain GPIO (PA) List

Table 5-2: GPIO (PA) Pin List

Pin Number			Pin Name	Type	Sel #	Function
SF32LB560	SF32LB561 SF32LB563	SF32LB565 SF32LB566 SF32LB567				
QFN68L	QFN68L	BGA175				
-	-	R9	PA00	I/O	0	GPIO_A0
					2	WLAN_ACTIVE
					3	ATIM1_CH1
					4	PA_I2C_UART
					5	PA_TIM
					6	SCI_CLK
					Others	Reserved
-	-	P9	PA01	I/O	0	GPIO_A1
					2	BT_ACTIVE
					3	ATIM1_CH1N
					4	PA_I2C_UART
					5	PA_TIM
					6	SCI_DIO
					7	SPI1_DI
					Others	Reserved
-	-	M9	PA02	I/O	0	GPIO_A2
					2	BT_COLLISION
					4	PA_I2C_UART
					5	PA_TIM
					6	SCI_RST
					7	SPI1_CS
					Others	Reserved
-	-	L9	PA03	I/O	0	GPIO_A3
					3	ATIM1_CH2
					4	PA_I2C_UART
					5	PA_TIM
					6	CAN1_TXD
					7	SPI1_DO
					8	SPI1_DIO
					Others	Reserved
-	-	N8	PA04	I/O	0	GPIO_A4
					2	BT_PRIORITY
					3	ATIM1_CH2N
					4	PA_I2C_UART
					5	PA_TIM
					6	CAN1_RXD
					7	SPI1_CLK
					Others	Reserved
-	26	P8	PA05	I/O	0	GPIO_A5
					4	PA_I2C_UART
					5	PA_TIM
					Others	Reserved

Continued on the next page

©2026 SiFli Technologies (Nanjing) Co., Ltd. www.sifli.com

Table 5-2: GPIO (PA) Pin List (continued)

Pin Number			Pin Name	Type	Sel #	Function
SF32LB560	SF32LB561 SF32LB563	SF32LB565 SF32LB566 SF32LB567				
QFN68L	QFN68L	BGA175				
24	24	M8	PA06	I/O	0	GPIO_A6
					1	SD2_DIO2
					2	MPI3_CS
					3	I2S1_MCLK
					4	PA_I2C_UART
					5	PA_TIM
					Others	Reserved
23	23	L7	PA07	I/O	0	GPIO_A7
					1	SD2_DIO3
					2	MPI3_DIO1
					3	I2S1_SDI
					4	PA_I2C_UART
					5	PA_TIM
					Others	Reserved
22	22	R7	PA08	I/O	0	GPIO_A8
					1	SD2_CLK
					2	MPI3_DIO2
					3	I2S1_SDO
					4	PA_I2C_UART
					5	PA_TIM
					Others	Reserved
21	21	P7	PA09	I/O	0	GPIO_A9
					1	SD2_CMD
					2	MPI3_DIO0
					3	I2S1_BCK
					4	PA_I2C_UART
					5	PA_TIM
					Others	Reserved
20	20	J7	PA10	I/O	0	GPIO_A10
					1	SD2_DIO0
					2	MPI3_CLK
					3	I2S1_LRCK
					4	PA_I2C_UART
					5	PA_TIM
					Others	Reserved
19	19	M6	PA11	I/O	0	GPIO_A11
					1	SD2_DIO1
					2	MPI3_DIO3
					4	PA_I2C_UART
					5	PA_TIM
					Others	Reserved

Continued on the next page

©2026 SiFli Technologies (Nanjing) Co., Ltd. www.sifli.com

Table 5-2: GPIO (PA) Pin List (continued)

Pin Number			Pin Name	Type	Sel #	Function
SF32LB560	SF32LB561 SF32LB563	SF32LB565 SF32LB566 SF32LB567				
QFN68L	QFN68L	BGA175				
-	-	R6	PA12	I/O	0	GPIO_A12
					1	SD1_DIO2
					2	MPI3_CS
					4	PA_I2C_UART
					5	PA_TIM
					Others	Reserved
-	-	N5	PA13	I/O	0	GPIO_A13
					1	SD1_DIO6
					2	BT_ACTIVE
					3	ATIM1_CH3
					4	PA_I2C_UART
					5	PA_TIM
					6	LCDC1_DPI_R1
					Others	Reserved
-	-	M5	PA14	I/O	0	GPIO_A14
					1	SD1_DIO7
					2	WLAN_ACTIVE
					3	ATIM1_CH3N
					4	PA_I2C_UART
					5	PA_TIM
					6	LCDC1_DPI_R0
					Others	Reserved
-	-	R5	PA15	I/O	0	GPIO_A15
					1	SD1_DIO1
					2	MPI3_DIO3
					4	PA_I2C_UART
					5	PA_TIM
					Others	Reserved
-	-	L5	PA16	I/O	0	GPIO_A16
					3	ATIM1_CH4
					4	PA_I2C_UART
					5	PA_TIM
					6	LCDC1_DPI_R2
					Others	Reserved
17	17	P5	PA17	I/O	0	GPIO_A17
					2	#USB11_DP
					3	ATIM1_BKIN
					4	PA_I2C_UART
					5	PA_TIM
					Others	Reserved

Continued on the next page

©2026 SiFli Technologies (Nanjing) Co., Ltd. www.sifli.com

Table 5-2: GPIO (PA) Pin List (continued)

Pin Number			Pin Name	Type	Sel #	Function
SF32LB560	SF32LB561 SF32LB563	SF32LB565 SF32LB566 SF32LB567				
QFN68L	QFN68L	BGA175				
16	16	P4	PA18	I/O	0	GPIO_A18
					2	#USB11_DM
					3	ATIM1_BKIN2
					4	PA_I2C_UART
					5	PA_TIM
					Others	Reserved
-	-	P3	PA19	I/O	0	GPIO_A19
					1	SD1_DIO5
					2	BT_PRIORITY
					3	ATIM1_ETR
					4	PA_I2C_UART
					5	PA_TIM
					6	LCDC1_DPI_R4
					Others	Reserved
-	-	P1	PA20	I/O	0	GPIO_A20
					1	SD1_DIO3
					2	MPI3_DIO1
					3	SPI1_CLK
					4	PA_I2C_UART
					5	PA_TIM
					7	I2S1_LRCK
					8	PDM1_DATA
					Others	Reserved
-	-	R2	PA21	I/O	0	GPIO_A21
					1	SD1_DIO4
					2	BT_COLLISION
					4	PA_I2C_UART
					5	PA_TIM
					6	LCDC1_DPI_R5
					Others	Reserved
-	-	R3	PA22	I/O	0	GPIO_A22
					1	SD1_DIO0
					2	MPI3_CLK
					4	PA_I2C_UART
					5	PA_TIM
					Others	Reserved
-	-	P2	PA23	I/O	0	GPIO_A23
					4	PA_I2C_UART
					5	PA_TIM
					6	LCDC1_DPI_R6
					Others	Reserved

Continued on the next page

©2026 SiFli Technologies (Nanjing) Co., Ltd. www.sifli.com

Table 5-2: GPIO (PA) Pin List (continued)

Pin Number			Pin Name	Type	Sel #	Function
SF32LB560	SF32LB561 SF32LB563	SF32LB565 SF32LB566 SF32LB567				
QFN68L	QFN68L	BGA175				
-	-	N4	PA24	I/O	0	GPIO_A24
					2	ATIM1_CH1
					3	SPI1_CS
					4	PA_I2C_UART
					5	PA_TIM
					6	LCDC1_DPI_R3
					7	I2S1_SDI
					8	PDM1_CLK
					Others	Reserved
-	-	N3	PA25	I/O	0	GPIO_A25
					1	SD1_CLKIN
					2	ATIM1_CH1N
					3	SPI1_DI
					4	PA_I2C_UART
					5	PA_TIM
					6	LCDC1_DPI_R7
					7	I2S1_BCK
					8	PDM2_DATA
					Others	Reserved
-	-	N1	PA26	I/O	0	GPIO_A26
					1	SD1_CLK
					2	MPI3_DIO2
					3	SPI1_DO
					4	PA_I2C_UART
					5	PA_TIM
					7	I2S1_SDO
					8	PDM2_CLK
					Others	Reserved
-	-	N2	PA27	I/O	0	GPIO_A27
					1	SD1_CMD
					2	MPI3_DIO0
					4	PA_I2C_UART
					5	PA_TIM
					Others	Reserved
15	15	M3	PA28	I/O	0	GPIO_A28
					2	SPI2_CS
					3	SWDIO
					4	PA_I2C_UART
					5	PA_TIM
					6	LCDC1_DPI_G0
					7	LCDC1_JDI_B2
					8	LCDC1_8080_DIO2
					Others	Reserved

Continued on the next page

©2026 SiFli Technologies (Nanjing) Co., Ltd. www.sifli.com

Table 5-2: GPIO (PA) Pin List (continued)

Pin Number			Pin Name	Type	Sel #	Function
SF32LB560	SF32LB561 SF32LB563	SF32LB565 SF32LB566 SF32LB567				
QFN68L	QFN68L	BGA175				
-	-	L4	PA29	I/O	0	GPIO_A29
					2	SPI2_DI
					3	ATIM1_CH2
					4	PA_I2C_UART
					5	PA_TIM
					6	LCDC1_DPI_G5
					7	LCDC1_JDI_R1
					8	LCDC1_8080_DIO3
					Others	Reserved
-	-	M2	PA30	I/O	0	GPIO_A30
					2	SPI2_CLK
					3	ATIM1_CH2N
					4	PA_I2C_UART
					5	PA_TIM
					6	LCDC1_DPI_G1
					7	LCDC1_JDI_B1
					8	LCDC1_8080_DIO4
					Others	Reserved
14	14	K5	PA31	I/O	0	GPIO_A31
					3	SWCLK
					4	PA_I2C_UART
					5	PA_TIM
					6	LCDC1_DPI_G6
					7	LCDC1_JDI_R2
					8	LCDC1_8080_DIO5
					Others	Reserved
-	-	L3	PA32	I/O	0	GPIO_A32
					4	PA_I2C_UART
					5	PA_TIM
					6	LCDC1_DPI_G2
					7	LCDC1_JDI_G2
					8	LCDC1_8080_DIO6
					Others	Reserved
13	13	L1	PA33	I/O	0	GPIO_A33
					1	LCDC1_SPI_TE
					4	PA_I2C_UART
					5	PA_TIM
					6	LCDC1_DPI_G3
					8	LCDC1_8080_TE
					Others	Reserved

Continued on the next page

©2026 SiFli Technologies (Nanjing) Co., Ltd. www.sifli.com

Table 5-2: GPIO (PA) Pin List (continued)

Pin Number			Pin Name	Type	Sel #	Function
SF32LB560	SF32LB561 SF32LB563	SF32LB565 SF32LB566 SF32LB567				
QFN68L	QFN68L	BGA175				
-	-	L2	PA34	I/O	0	GPIO_A34
					2	SPI2_DO
					3	SPI2_DIO
					4	PA_I2C_UART
					5	PA_TIM
					6	LCDC1_DPI_G4
					7	LCDC1_JDI_G1
					8	LCDC1_8080_DIO7
					Others	Reserved
-	-	K1	PA35	I/O	0	GPIO_A35
					4	PA_I2C_UART
					5	PA_TIM
					6	LCDC1_DPI_G7
					Others	Reserved
12	12	K4	PA36	I/O	0	GPIO_A36
					1	LCDC1_SPI_CS
					4	PA_I2C_UART
					5	PA_TIM
					6	LCDC1_DPI_B0
					7	LCDC1_JDI_HCK
					8	LCDC1_8080_CS
					Others	Reserved
11	11	J5	PA37	I/O	0	GPIO_A37
					1	LCDC1_SPI_CLK
					2	I2S1_MCLK
					4	PA_I2C_UART
					5	PA_TIM
					6	LCDC1_DPI_B1
					8	LCDC1_8080_WR
					Others	Reserved
10	10	K2	PA38	I/O	0	GPIO_A38
					1	LCDC1_SPI_DIO0
					2	I2S1_SDI
					4	PA_I2C_UART
					5	PA_TIM
					6	LCDC1_DPI_B2
					7	LCDC1_JDI_HST
					8	LCDC1_8080_RD
					Others	Reserved

Continued on the next page

©2026 SiFli Technologies (Nanjing) Co., Ltd. www.sifli.com

Table 5-2: GPIO (PA) Pin List (continued)

Pin Number			Pin Name	Type	Sel #	Function
SF32LB560	SF32LB561 SF32LB563	SF32LB565 SF32LB566 SF32LB567				
QFN68L	QFN68L	BGA175				
9	9	H5	PA39	I/O	0	GPIO_A39
					1	LCDC1_SPI_DIO1
					2	I2S1_SDO
					4	PA_I2C_UART
					5	PA_TIM
					6	LCDC1_DPI_B5
					7	LCDC1_JDI_XRST
					8	LCDC1_8080_DC
					Others	Reserved
8	8	H4	PA40	I/O	0	GPIO_A40
					1	LCDC1_SPI_DIO2
					2	I2S1_BCK
					4	PA_I2C_UART
					5	PA_TIM
					6	LCDC1_DPI_B6
					7	LCDC1_JDI_VST
					8	LCDC1_8080_DIO0
					Others	Reserved
7	7	J2	PA41	I/O	0	GPIO_A41
					1	LCDC1_SPI_DIO3
					2	I2S1_LRCK
					4	PA_I2C_UART
					5	PA_TIM
					6	LCDC1_DPI_B4
					7	LCDC1_JDI_VCK
					8	LCDC1_8080_DIO1
					Others	Reserved
-	-	G5	PA42	I/O	0	GPIO_A42
					4	PA_I2C_UART
					5	PA_TIM
					6	LCDC1_DPI_VSYNC
					Others	Reserved
-	-	H3	PA43	I/O	0	GPIO_A43
					1	LCDC1_SPI_RSTB
					4	PA_I2C_UART
					5	PA_TIM
					6	LCDC1_DPI_B3
					7	LCDC1_JDI_ENB
					8	LCDC1_8080_RSTB
					Others	Reserved

Continued on the next page

©2026 SiFli Technologies (Nanjing) Co., Ltd. www.sifli.com

Table 5-2: GPIO (PA) Pin List (continued)

Pin Number			Pin Name	Type	Sel #	Function
SF32LB560	SF32LB561 SF32LB563	SF32LB565 SF32LB566 SF32LB567				
QFN68L	QFN68L	BGA175				
-	-	G3	PA44	I/O	0	GPIO_A44
					3	ATIM1_CH3
					4	PA_I2C_UART
					5	PA_TIM
					6	LCDC1_DPI_HSYNC
					Others	Reserved
-	-	G2	PA45	I/O	0	GPIO_A45
					3	ATIM1_CH3N
					4	PA_I2C_UART
					5	PA_TIM
					6	LCDC1_DPI_CLK
					Others	Reserved
-	-	G1	PA46	I/O	0	GPIO_A46
					4	PA_I2C_UART
					5	PA_TIM
					6	LCDC1_DPI_B7
					Others	Reserved
-	-	G4	PA47	I/O	0	GPIO_A47
					3	ATIM1_CH4
					4	PA_I2C_UART
					5	PA_TIM
					6	LCDC1_DPI_DE
					Others	Reserved
5	5	F3	PA48	I/O	0	GPIO_A48
					4	PA_I2C_UART
					5	PA_TIM
					Others	Reserved
4	4	F2	PA49	I/O	0	GPIO_A49
					4	PA_I2C_UART
					5	PA_TIM
					Others	Reserved
3	3	E2	PA50	I/O	0	GPIO_A50
					2	#WKUP_PIN5
					4	PA_I2C_UART
					5	PA_TIM
					6	LCDC1_DPI_SD
					Others	Reserved
2	2	E1	PA51	I/O	0	GPIO_A51
					2	#WKUP_PIN6
					4	PA_I2C_UART
					5	PA_TIM
					6	LCDC1_DPI_CM
					Others	Reserved

Continued on the next page

©2026 SiFli Technologies (Nanjing) Co., Ltd. www.sifli.com

Table 5-2: GPIO (PA) Pin List (continued)

Pin Number			Pin Name	Type	Sel #	Function
SF32LB560	SF32LB561 SF32LB563	SF32LB565 SF32LB566 SF32LB567				
QFN68L	QFN68L	BGA175				
-	-	C3	PA52	I/O	0	GPIO_A52
					2	#WKUP_PIN7
					3	ATIM1_BKIN
					4	PA_I2C_UART
					5	PA_TIM
					Others	Reserved
-	-	D2	PA53	I/O	0	GPIO_A53
					2	#WKUP_PIN8
					3	ATIM1_BKIN2
					4	PA_I2C_UART
					5	PA_TIM
					Others	Reserved
-	-	D3	PA54	I/O	0	GPIO_A54
					2	#WKUP_PIN9
					3	ATIM1_ETR
					4	PA_I2C_UART
					5	PA_TIM
					Others	Reserved
61	61	A5	PA55	I/O	0	GPIO_A55
					1	#XTAL32K_XI
					4	PA_I2C_UART
					5	PA_TIM
					Others	Reserved
60	60	A6	PA56	I/O	0	GPIO_A56
					1	#XTAL32K_XO
					4	PA_I2C_UART
					5	PA_TIM
					Others	Reserved
-	-	D6	PA57	I/O	0	GPIO_A57
					1	SPI1_CLK
					4	PA_I2C_UART
					5	PA_TIM
					Others	Reserved
-	-	D4	PA58	I/O	0	GPIO_A58
					1	SPI1_CS
					4	PA_I2C_UART
					5	PA_TIM
					Others	Reserved
-	-	F4	PA59	I/O	0	GPIO_A59
					1	SPI1_DI
					4	PA_I2C_UART
					5	PA_TIM
					Others	Reserved

Continued on the next page

©2026 SiFli Technologies (Nanjing) Co., Ltd. www.sifli.com

Table 5-2: GPIO (PA) Pin List (continued)

Pin Number			Pin Name	Type	Sel #	Function
SF32LB560	SF32LB561 SF32LB563	SF32LB565 SF32LB566 SF32LB567				
QFN68L	QFN68L	BGA175				
-	-	C6	PA60	I/O	0	GPIO_A60
					3	ATIM1_CH1
					4	PA_I2C_UART
					5	PA_TIM
					Others	Reserved
-	-	E6	PA61	I/O	0	GPIO_A61
					1	SPI1_DO
					2	SPI1_DIO
					4	PA_I2C_UART
					5	PA_TIM
					Others	Reserved
-	-	C7	PA62	I/O	0	GPIO_A62
					3	ATIM1_CH1N
					4	PA_I2C_UART
					5	PA_TIM
					Others	Reserved
-	-	D7	PA63	I/O	0	GPIO_A63
					4	PA_I2C_UART
					5	PA_TIM
					Others	Reserved
-	-	B7	PA64	I/O	0	GPIO_A64
					1	I2S1_SDO
					2	PDM1_DATA
					4	PA_I2C_UART
					5	PA_TIM
					6	SPI2_DO
					7	SPI2_DIO
					Others	Reserved
-	-	A7	PA65	I/O	0	GPIO_A65
					1	I2S1_MCLK
					4	PA_I2C_UART
					5	PA_TIM
					Others	Reserved
-	-	E7	PA66	I/O	0	GPIO_A66
					3	ATIM1_CH2
					4	PA_I2C_UART
					5	PA_TIM
					Others	Reserved
-	-	D8	PA67	I/O	0	GPIO_A67
					4	PA_I2C_UART
					5	PA_TIM
					Others	Reserved

Continued on the next page

©2026 SiFli Technologies (Nanjing) Co., Ltd. www.sifli.com

Table 5-2: GPIO (PA) Pin List (continued)

Pin Number			Pin Name	Type	Sel #	Function
SF32LB560	SF32LB561 SF32LB563	SF32LB565 SF32LB566 SF32LB567				
QFN68L	QFN68L	BGA175				
-	-	E8	PA68	I/O	0	GPIO_A68
					3	ATIM1_CH2N
					4	PA_I2C_UART
					5	PA_TIM
					Others	Reserved
-	-	B8	PA69	I/O	0	GPIO_A69
					1	I2S1_SDI
					2	PDM1_CLK
					4	PA_I2C_UART
					5	PA_TIM
					6	SPI2_DI
					Others	Reserved
-	-	E9	PA70	I/O	0	GPIO_A70
					3	ATIM1_CH3
					4	PA_I2C_UART
					5	PA_TIM
					Others	Reserved
-	-	B9	PA71	I/O	0	GPIO_A71
					1	I2S1_LRCK
					2	PDM2_DATA
					3	ATIM1_CH3N
					4	PA_I2C_UART
					5	PA_TIM
					6	SPI2_CS
					Others	Reserved
-	-	E10	PA72	I/O	0	GPIO_A72
					4	PA_I2C_UART
					5	PA_TIM
					Others	Reserved
-	-	A9	PA73	I/O	0	GPIO_A73
					1	I2S1_BCK
					2	PDM2_CLK
					3	ATIM1_CH4
					4	PA_I2C_UART
					5	PA_TIM
					6	SPI2_CLK
					Others	Reserved
-	-	E11	PA74	I/O	0	GPIO_A74
					4	PA_I2C_UART
					5	PA_TIM
					Others	Reserved

Continued on the next page

©2026 SiFli Technologies (Nanjing) Co., Ltd. www.sifli.com

Table 5-2: GPIO (PA) Pin List (continued)

Pin Number			Pin Name	Type	Sel #	Function
SF32LB560	SF32LB561 SF32LB563	SF32LB565 SF32LB566 SF32LB567				
QFN68L	QFN68L	BGA175				
-	-	C11	PA75	I/O	0	GPIO_A75
					3	ATIM1_BKIN
					4	PA_I2C_UART
					5	PA_TIM
					Others	Reserved
-	-	D10	PA76	I/O	0	GPIO_A76
					3	ATIM1_BKIN2
					4	PA_I2C_UART
					5	PA_TIM
					Others	Reserved
-	-	E12	PA77	I/O	0	GPIO_A77
					3	ATIM1_ETR
					4	PA_I2C_UART
					5	PA_TIM
					Others	Reserved
-	-	C10	PA78	I/O	0	GPIO_A78
					4	PA_I2C_UART
					5	PA_TIM
					Others	Reserved

1. PA_I2C_UART*: Select general I2C or UART function. By setting the pin number of an I2C (or UART) function in SYSCFG1, any function of I2C1/2/3/4 and UART1/2/3 can be mapped to any PA pin. For example, set PA01 and PA03 as PA_I2C_UART, then for I2C2 set SDA pin=1 (i.e. PA01), SCL pin=3 (i.e. PA03).
2. PA_TIM*: Select general TIMER function. By setting the pin number of a GPTIM function in SYSCFG1, any signal of GPTIM1/2 can be mapped to any PA pin.

©2026 SiFli Technologies (Nanjing) Co., Ltd. www.sifli.com

5.2.2 LITTLE Core Domain GPIO (PB) List

Table 5-3: GPIO (PB) Pin List

Pin Number			Pin Name	Type	Sel #	Function
SF32LB560	SF32LB561 SF32LB563	SF32LB565 SF32LB566 SF32LB567				
QFN68L	QFN68L	BGA175				
-	-	L10	PB00	I/O	0	GPIO_B0
					2	PB_I2C_UART
					3	PB_TIM
					Others	Reserved
-	-	L11	PB01	I/O	0	GPIO_B1
					2	PB_I2C_UART
					3	PB_TIM
					Others	Reserved
-	-	P10	PB02	I/O	0	GPIO_B2
					2	PB_I2C_UART
					3	PB_TIM
					Others	Reserved
-	-	M11	PB03	I/O	0	GPIO_B3
					2	PB_I2C_UART
					3	PB_TIM
					4	BT_COLLISION
					Others	Reserved
26	-	H10	PB04	I/O	0	GPIO_B4
					1	TWI_CLK
					2	PB_I2C_UART
					3	PB_TIM
					Others	Reserved
27	-	G10	PB05	I/O	0	GPIO_B5
					1	TWI_DIO
					2	PB_I2C_UART
					3	PB_TIM
					Others	Reserved
-	-	P11	PB06	I/O	0	GPIO_B6
					2	PB_I2C_UART
					3	PB_TIM
					4	BT_ACTIVE
					7	LPCOMP1_OUT
					Others	Reserved
-	-	N11	PB07	I/O	0	GPIO_B7
					2	PB_I2C_UART
					3	PB_TIM
					4	WLAN_ACTIVE
					Others	Reserved

Continued on the next page

©2026 SiFli Technologies (Nanjing) Co., Ltd. www.sifli.com

Table 5-3: GPIO (PB) Pin List (continued)

Pin Number			Pin Name	Type	Sel #	Function
SF32LB560	SF32LB561 SF32LB563	SF32LB565 SF32LB566 SF32LB567				
QFN68L	QFN68L	BGA175				
-	-	P13	PB08	I/O	0	GPIO_B8
					1	SPI4_CS
					2	PB_I2C_UART
					3	PB_TIM
					4	BT_PRIORITY
					Others	Reserved
-	-	J12	PB09	I/O	0	GPIO_B9
					1	SPI4_CLK
					2	PB_I2C_UART
					3	PB_TIM
					Others	Reserved
-	-	N13	PB10	I/O	0	GPIO_B10
					2	PB_I2C_UART
					3	PB_TIM
					Others	Reserved
-	-	K12	PB11	I/O	0	GPIO_B11
					1	SPI4_DI
					2	PB_I2C_UART
					3	PB_TIM
					Others	Reserved
-	-	R13	PB12	I/O	0	GPIO_B12
					1	SPI4_DO
					2	PB_I2C_UART
					3	PB_TIM
					4	SPI4_DIO
					Others	Reserved
28	28	R12	PB13	I/O	0	SWDIO
					1	GPIO_B13
					2	PB_I2C_UART
					3	PB_TIM
					Others	Reserved
-	-	N14	PB14	I/O	0	GPIO_B14
					2	PB_I2C_UART
					3	PB_TIM
					Others	Reserved
29	29	P12	PB15	I/O	0	SWCLK
					1	GPIO_B15
					2	PB_I2C_UART
					3	PB_TIM
					Others	Reserved

Continued on the next page

©2026 SiFli Technologies (Nanjing) Co., Ltd. www.sifli.com

Table 5-3: GPIO (PB) Pin List (continued)

Pin Number			Pin Name	Type	Sel #	Function
SF32LB560	SF32LB561 SF32LB563	SF32LB565 SF32LB566 SF32LB567				
QFN68L	QFN68L	BGA175				
30	30	N12	PB16	I/O	0	GPIO_B16
					2	PB_I2C_UART
					3	PB_TIM
					7	#DCTEST0
					Others	Reserved
31	31	M12	PB17	I/O	0	GPIO_B17
					2	PB_I2C_UART
					3	PB_TIM
					7	#DCTEST1
					Others	Reserved
32	32	P14	PB18	I/O	0	GPIO_B18
					1	SPI3_CS
					2	PB_I2C_UART
					3	PB_TIM
					7	#LPCOMP1_P
					Others	Reserved
33	33	P15	PB19	I/O	0	GPIO_B19
					1	SPI3_CLK
					2	PB_I2C_UART
					3	PB_TIM
					7	#LPCOMP1_N
					Others	Reserved
34	34	P16	PB20	I/O	0	GPIO_B20
					1	SPI3_DI
					2	PB_I2C_UART
					3	PB_TIM
					7	#LPCOMP2_P
					Others	Reserved
35	35	R15	PB21	I/O	0	GPIO_B21
					1	SPI3_DO
					2	PB_I2C_UART
					3	PB_TIM
					4	SPI3_DIO
					7	#LPCOMP2_N
					Others	Reserved
36	36	K13	PB22	I/O	0	GPIO_B22
					2	PB_I2C_UART
					3	PB_TIM
					4	TWI_CLK
					7	#GPADC_CH0
					Others	Reserved

Continued on the next page

©2026 SiFli Technologies (Nanjing) Co., Ltd. www.sifli.com

Table 5-3: GPIO (PB) Pin List (continued)

Pin Number			Pin Name	Type	Sel #	Function
SF32LB560	SF32LB561 SF32LB563	SF32LB565 SF32LB566 SF32LB567				
QFN68L	QFN68L	BGA175				
37	37	L13	PB23	I/O	0	GPIO_B23
					2	PB_I2C_UART
					3	PB_TIM
					4	TWI_DIO
					7	#GPADC_CH1
					Others	Reserved
38	38	L14	PB24	I/O	0	GPIO_B24
					2	PB_I2C_UART
					3	PB_TIM
					7	#GPADC_CH2
					Others	Reserved
39	39	N15	PB25	I/O	0	GPIO_B25
					2	PB_I2C_UART
					3	PB_TIM
					7	#GPADC_CH3
					Others	Reserved
40	40	M14	PB26	I/O	0	GPIO_B26
					2	PB_I2C_UART
					3	PB_TIM
					7	#GPADC_CH4
					Others	Reserved
41	41	N16	PB27	I/O	0	GPIO_B27
					2	PB_I2C_UART
					3	PB_TIM
					7	#GPADC_CH5
					Others	Reserved
-	-	M15	PB28	I/O	0	GPIO_B28
					2	PB_I2C_UART
					3	PB_TIM
					4	BT_COLLISION
					7	#GPADC_CH6
					Others	Reserved
-	-	C15	PB29	I/O	0	GPIO_B29
					2	PB_I2C_UART
					3	PB_TIM
					4	BT_PRIORITY
					7	LPCOMP2_OUT
					Others	Reserved
-	-	B16	PB30	I/O	0	GPIO_B30
					2	PB_I2C_UART
					3	PB_TIM
					4	BT_ACTIVE
					Others	Reserved

Continued on the next page

©2026 SiFli Technologies (Nanjing) Co., Ltd. www.sifli.com

Table 5-3: GPIO (PB) Pin List (continued)

Pin Number			Pin Name	Type	Sel #	Function
SF32LB560	SF32LB561 SF32LB563	SF32LB565 SF32LB566 SF32LB567				
QFN68L	QFN68L	BGA175				
-	-	B15	PB31	I/O	0	GPIO_B31
					2	PB_I2C_UART
					3	PB_TIM
					4	WLAN_ACTIVE
					Others	Reserved
54	54	D13	PB32	I/O	0	GPIO_B32
					1	#WKUP_PIN0
					7	#GPADC_CH7
					Others	Reserved
55	55	D14	PB33	I/O	0	GPIO_B33
					1	#WKUP_PIN1
					7	#ACTEST0
					Others	Reserved
56	56	C14	PB34	I/O	0	GPIO_B34
					1	#WKUP_PIN2
					7	#ACTEST1
					Others	Reserved
-	-	A15	PB35	I/O	0	GPIO_B35
					1	#WKUP_PIN3
					Others	Reserved
-	-	B14	PB36	I/O	0	GPIO_B36
					1	#WKUP_PIN4
					Others	Reserved
59	59	A10	PBR00	I/O	0	PWR_REQ
					1	GPO
					2	LPTIM3_OUT
					3	LPTIM3_OUT_BAR
					Others	Reserved
58	58	B10	PBR01	I/O	0	GPO
					1	CLK_LP
					2	LPTIM3_OUT
					3	LPTIM3_OUT_BAR
					Others	Reserved
57	57	D12	PBR02	I/O	0	GPO
					1	CLK_LP
					2	LPTIM3_OUT
					3	LPTIM3_OUT_BAR
					Others	Reserved
-	-	B11	PBR03	I/O	0	GPO
					1	CLK_LP
					2	LPTIM3_OUT
					3	LPTIM3_OUT_BAR
					Others	Reserved

1. PB_I2C_UART*: Select general I2C or UART function. By setting the pin number of an I2C (or UART) function in SYSCFG2, any function of I2C5/6/7 and UART4/5/6 can be mapped to any PB pin. For example, set PB23 and PA24 as PB_I2C_UART, then for UART5 set RXD pin=23 (i.e. PB23), TXD pin=24 (i.e. PB24).
2. PB_TIM*: Select general TIMER function. By setting the pin number of a GPTIM function in SYSCFG2, any signal of GPTIM3/4 can be mapped to any PB pin.
3. PWR_REQ*: When the chip is powered on or the LITTLE core wakes up from standby, the signal will be pulled up from low in advance (before

©2026 SiFli Technologies (Nanjing) Co., Ltd. www.sifli.com

LCPU is powered on). It is suitable to be used as a power-on enable signal of LITTLE core FLASH.

4. CLK_LP*: It can output XTAL32K clock for external chips.
5. LPTIM3_OUT*： It can output a signal around 60Hz, which can be used for interfaces such as JDI.

5.2.3 List of Dedicated Pins (Power, RF, Analog, I/O)

Table 5-4: List of Dedicated Pins (Power, RF, Analog, I/O)

Pin Number			Pin Name	Type	Description
SF32LB560	SF32LB561 SF32LB563	SF32LB565 SF32LB566 SF32LB567			
QFN68L	QFN68L	BGA175			
66	66	A2	PVDD	PWR	PVDD power input
		E4	PVSS	GND	BUCK ground
68	68	B1	BUCK_LX	PWR	BUCK_LX output
67	67	B2	BUCK_FB	PWR	Internal power input
65	65	B3	LDO1_VOUT	PWR	LDO1 output
64	64	C2	LDO2_VOUT	PWR	LDO2 output
63	63	B4	VDD_RET	PWR	RET LDO output
62	62	A3	VDD_RTC	PWR	RTC LDO output
		L6	VDDIOA	PWR	PA GPIO(except PA0~11) power input
		L8	VDDIOA2	PWR	PA0~11 power input
		J10	VDDIOB	PWR	GPIOB power input
		H1	VDDIOSA	PWR	SIPA power input
		H2	VDDIOSB	PWR	SIPB power input
		R10	VDDIOSC	PWR	SIPC power input
6	6		VDDIO1	PWR	Internal big core SiP memory power input
18	18		VDDIO2	PWR	PA GPIO(except PA6~11) power input
25	25		VDDIO3	PWR	PA6~11 power input*
	27		VDDIO4	PWR	PB GPIO and internal LITTLE core SiP Flash power input
50	50	H15	AVDD33_ANA	PWR	Analog power + RFPA power input
42	42	L15	GPADC_VREFP	A,I	GPADC reference voltage external capacitor pin
		L16	AVSS	GND	Analog Ground
1	1	D1	BOOT_MODE	I	Boot mode
53	53	A12	XTAL48M_XI	A,I/O	48MHz crystal I/O
52	52	A13	XTAL48M_XO	A,I/O	48MHz crystal I/O
		B12	AVSS	GND	Analog Ground
51	51	E16	BRF_ANT	A,I/O	RF antenna
		G16	AVDD_BRF	PWR	RF power input
		D16	AVSS_RF1	GND	RF Ground
		F15	AVSS_RF2	GND	RF Ground
		G15	AVSS_RF3	GND	RF Ground
		B13	AVSS_RF4	GND	RF Ground
46	46	F13	MIC_BIAS	PWR	MIC power output
48	48	G14	ADCP	A,I	Differential P or single-ended analog MIC input
47	47	G13	ADCN	A,I	Differential analog MIC input N or GND
44	44	K15	DACP	A,O	Differential analog output P
43	43	K16	DACN	A,O	Differential analog output N
49	49	H16	AVDD33_AUD	PWR	Analog audio power input
45	45	H13	AUD_VREF	A,I	Audio VREF input
		H14	AVSS	GND	Analog ground
		J15	AVSS	GND	Analog ground
		A1	VSS	GND	Ground

Continued on the next page

©2026 SiFli Technologies (Nanjing) Co., Ltd. www.sifli.com

Table 5-4: List of Dedicated Pins (Power, RF, Analog, I/O) (continued)

Pin Number			Pin Name	Type	Description
SF32LB560	SF32LB561 SF32LB563	SF32LB565 SF32LB566 SF32LB567			
QFN68L	QFN68L	BGA175			
		A16	VSS	GND	Ground
		B5	VSS	GND	Ground
		E13	VSS	GND	Ground
		G7	VSS	GND	Ground
		G8	VSS	GND	Ground
		G9	VSS	GND	Ground
		G12	VSS	GND	Ground
		H7	VSS	GND	Ground
		H8	VSS	GND	Ground
		H9	VSS	GND	Ground
		H12	VSS	GND	Ground
		F12	VSS	GND	Ground
		J8	VSS	GND	Ground
		J9	VSS	GND	Ground
		E5	VSS	GND	Ground
		L12	VSS	GND	Ground
		R1	VSS	GND	Ground
		R16	VSS	GND	Ground

* In SF32LB560, VDDIO3 and VDDIO4 of SF32LB561/SF32LB563 are merged into VDDIO3

©2026 SiFli Technologies (Nanjing) Co., Ltd. www.sifli.com

5.3 Package Dimensions

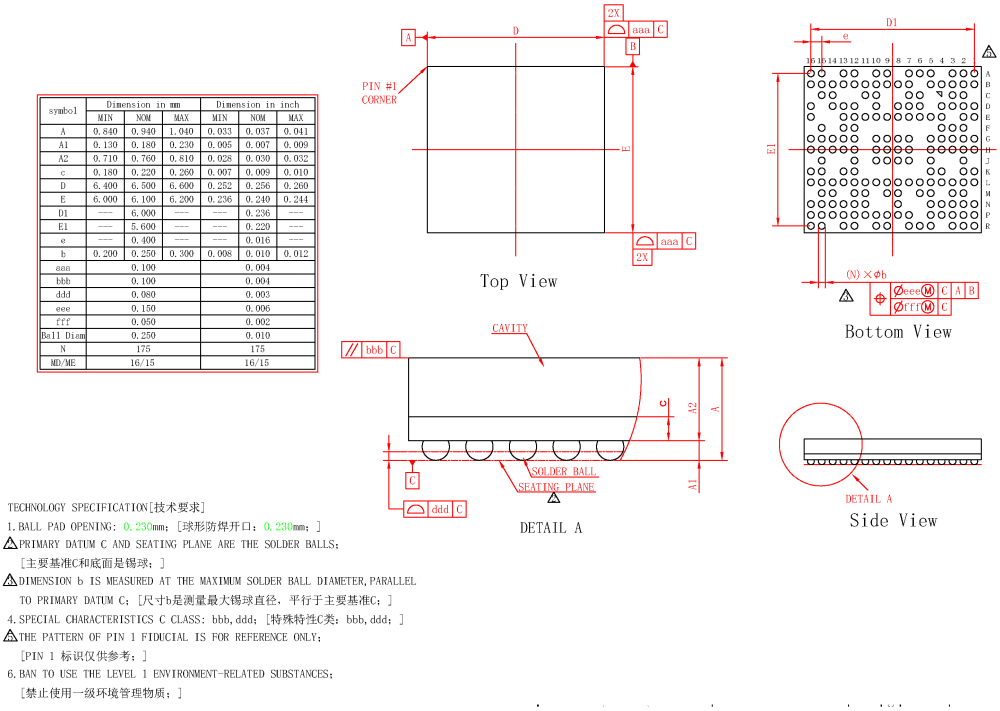

symbol	Dimension in mm			Dimension in inch		
	MIN	NOM	MAX	MIN	NOM	MAX
A	0.840	0.940	1.040	0.033	0.037	0.041
A1	0.130	0.180	0.230	0.005	0.007	0.009
A2	0.710	0.760	0.810	0.028	0.030	0.032
c	0.180	0.220	0.260	0.007	0.009	0.010
D	6.400	6.500	6.600	0.252	0.256	0.260
E	6.000	6.100	6.200	0.236	0.240	0.244
D1	----	6.000	----	----	0.236	----
E1	----	5.600	----	----	0.220	----
e	----	0.400	----	----	0.016	----
b	0.200	0.250	0.300	0.008	0.010	0.012
aaa	0.100			0.004		
bbb	0.100			0.004		
ddd	0.080			0.003		
eee	0.150			0.006		
fff	0.050			0.002		
Ball Diam	0.250			0.010		
N	175			175		
MD/ME	16/15			16/15		

TECHNOLOGY SPECIFICATION[技术要求]
1. BALL PAD OPENING: 0.230mm; [球形防焊开口：0.230mm；]
⚠PRIMARY DATUM C AND SEATING PLANE ARE THE SOLDER BALLS;
[主要基准C和底面是锡球；]
⚠DIMENSION b IS MEASURED AT THE MAXIMUM SOLDER BALL DIAMETER, PARALLEL TO PRIMARY DATUM C; [尺寸b是测量最大锡球直径，平行于主要基准C；]
4. SPECIAL CHARACTERISTICS C CLASS: bbb, ddd; [特殊特性C类：bbb, ddd；]
⚠THE PATTERN OF PIN 1 FIDUCIAL IS FOR REFERENCE ONLY;
[PIN 1 标识仅供参考；]
6. BAN TO USE THE LEVEL 1 ENVIRONMENT-RELATED SUBSTANCES;
[禁止使用一级环境管理物质；]

Figure 5-4: BGA175 Package Dimensions

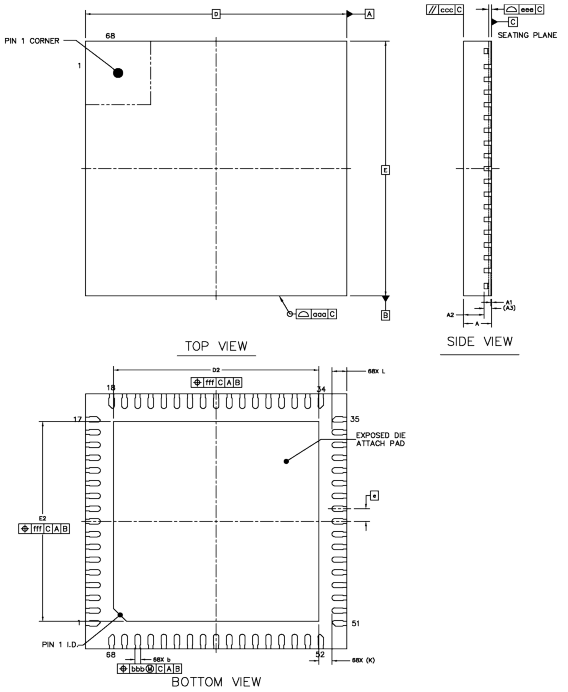

		SYMBOL	MIN	NOM	MAX
TOTAL THICKNESS		A	0.7	0.75	0.8
STAND OFF		A1	0	0.02	0.05
MOLD THICKNESS		A2	---	0.55	---
L/F THICKNESS		A3		0.203 REF	
LEAD WIDTH		b	0.1	0.15	0.2
BODY SIZE	X	D		7 BSC	
	Y	E		7 BSC	
LEAD PITCH		e		0.35 BSC	
EP SIZE	X	D2	5.39	5.49	5.59
	Y	E2	5.39	5.49	5.59
LEAD LENGTH		L	0.35	0.4	0.45
LEAD TIP TO EXPOSED PAD EDGE		K		0.355 REF	
PACKAGE EDGE TOLERANCE		aaa		0.1	
MOLD FLATNESS		ccc		0.1	
COPLANARITY		eee		0.08	
LEAD OFFSET		bbb		0.07	
EXPOSED PAD OFFSET		fff		0.1	

NOTES
1.REFER TO JEDEC MO-220;
2.COPLANARITY APPLIES TO LEADS, CORNER LEADS AND DIE ATTACH PAD;
3.BAN TO USE THE LEVEL 1 ENVIRONMENT-RELATED SUBSTANCES;
4.FINISH: Cu/EP · Sn8~20u

Figure 5-5: QFN68L Package Dimensions

©2026 SiFli Technologies (Nanjing) Co., Ltd. www.sifli.com

5.4 Carrier Tape Dimensions

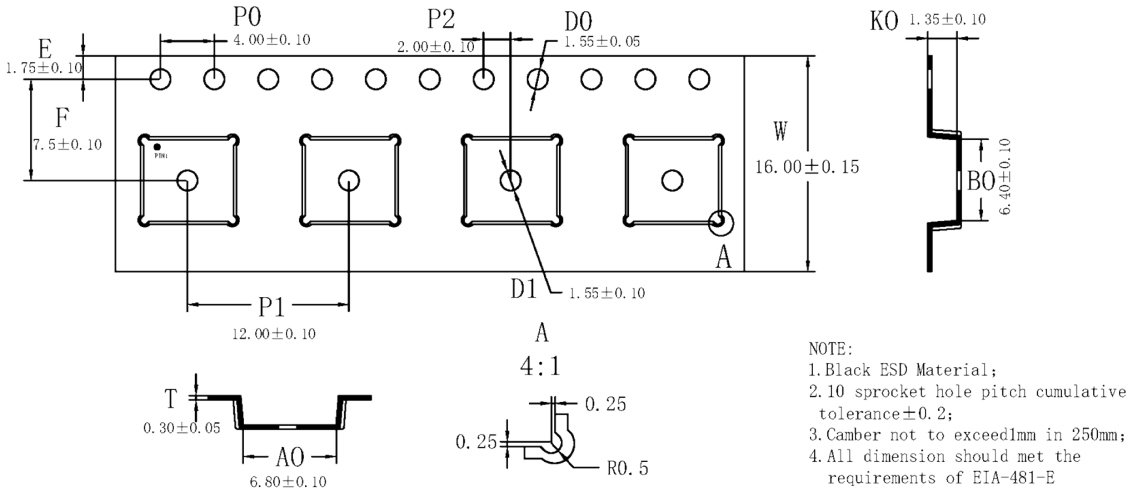

Figure 5-6: BGA175 Carrier Tape Dimensions

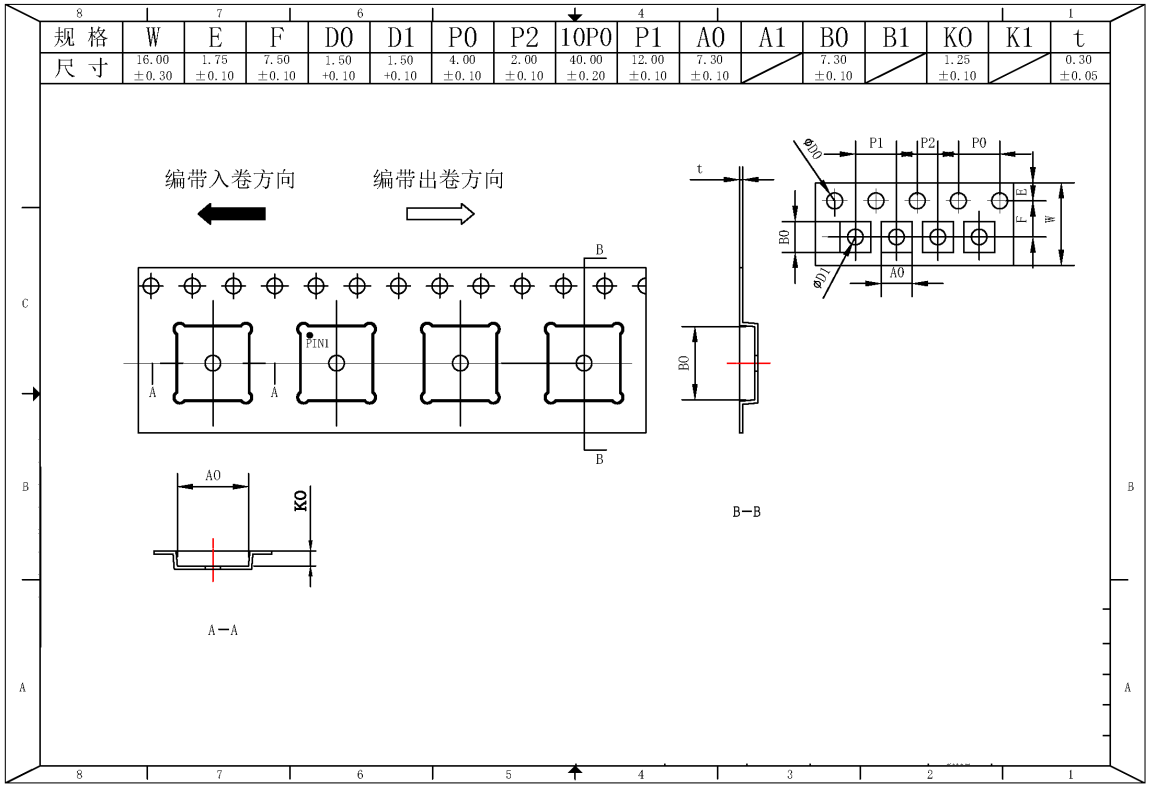

Figure 5-7: QFN68L Carrier Tape Dimensions

©2026 SiFli Technologies (Nanjing) Co., Ltd. www.sifli.com

5.5 Reel Dimensions

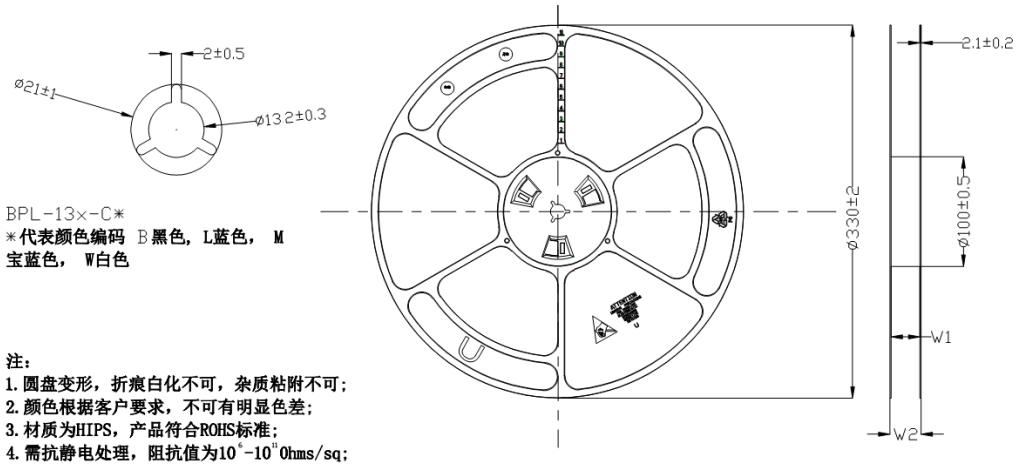

注：
1. 圆盘变形，折痕白化不可，杂质粘附不可；
2. 颜色根据客户要求，不可有明显色差；
3. 材质为HIPS，产品符合ROHS标准；
4. 需抗静电处理，阻抗值为10^{6}-10^{11}Ohms/sq；
5. 需用拉里针检测每批圆盘拉断力，标准＞10Kg

规 格	料 号	W1	W2
13*100*12mm	BPL-1312-C*	$12.5^{+1.5}_{-0}$	17.5±1
13*100*16mm	BPL-1316-C*	$16.5^{+1.5}_{-0}$	21.5±1
13*100*24mm	BPL-1324-C*	$24.5^{+1.5}_{-0}$	29.5±1

Figure 5-8: Reel Dimensions

5.6 Graded Reflow Soldering

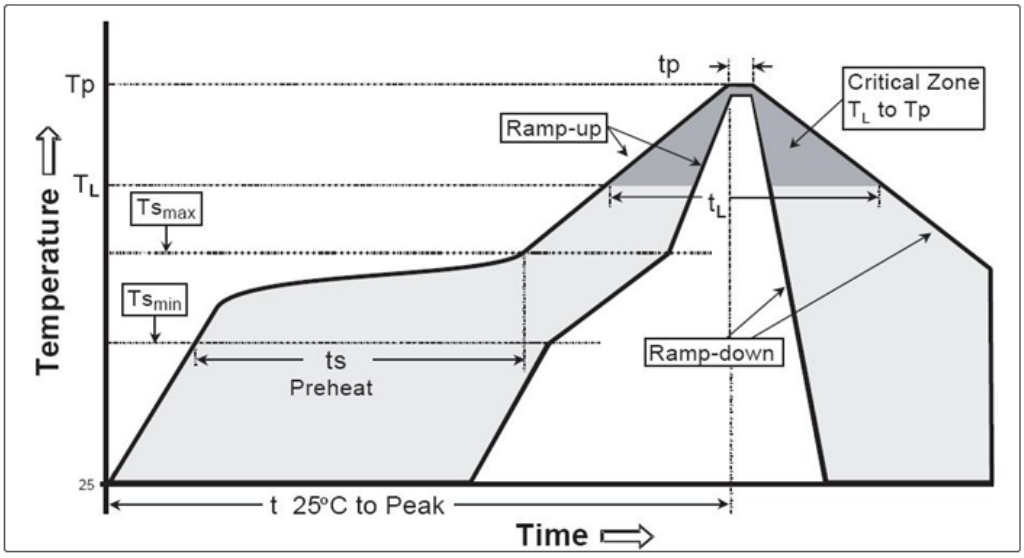

Figure 5-9: Graded Reflow Soldering

©2026 SiFli Technologies (Nanjing) Co., Ltd. www.sifli.com

Table 5-5: Comparison Table of Graded Reflow Soldering

Item	Tin-lead Process	Lead-free Process
Average Ramp-up Rate (Ts_{max} to T_p)	Max. 3°C/s	Max. 3°C/s
Preheat Temperature Min.(Ts_{min}) Preheat Temperature Max. (Ts_{max}) Preheat Time (Ts_{min} to Ts_{max})	100°C 100°C 60-120s	150°C 200°C 60-180s
Temperature_Time Maintained above (T_L) Time_Time Maintained above (t_L)	183°C 60-150s	217°C 60-150s
Peak Temperature （T_p）	225+0/-5°C	240+0/-5°C
Time of Peak Temperature （tp）	10-30s	20-40s
Ramp-down Rate	Max. 6°C/s	Max. 6°C/s
Time_25°C to Peak Temperature (t)	Max. 6 mins	Max. 8 mins

Table 5-6: Peak Reflow Temperature – Lead-free

Packaging Thickness	Volume (mm^3) <350	Volume (mm^3) ≥350
<2.5mm	240 + 0/-5°C	225 + 0/-5°C
≥2.5mm	225 + 0/-5°C	225 + 0/-5°C

Table 5-7: Graded Reflow Temperature – Lead-free

Packaging Thickness	Volume (mm^3) <350	Volume (mm^3) 350-2000	Volume (mm^3) >2000
<1.6mm	260 + 0 °C	260 + 0 °C	260 + 0 °C
1.6mm –2.5mm	260 + 0 °C	250 + 0 °C	245 + 0 °C
≥2.5mm	250 + 0 °C	245 + 0 °C	245 + 0 °C

5.7 Ordering Information

Table 5-8: Ordering Information

Part No.	Package Size	SiP Specification	Pack Quantity (PCS)
SF32LB567VND36	WBBGA175: 6.5×6.1×0.94mm-0.4	128Mb pSRAM + 8Mb Nor Flash	3000
SF32LB566VCB36	WBBGA175: 6.5×6.1×0.94mm-0.4	64Mb pSRAM + 32Mb pSRAM + 4Mb Nor Flash	3000
SF32LB56WUND26	QFN68L: 7×7×0.75mm-0.35	128Mb pSRAM + 4Mb Nor Flash	3000
SF32LB563UCN26	QFN68L: 7×7×0.75mm-0.35	64Mb pSRAM + 4Mb Nor Flash	3000
SF32LB561UBN26	QFN68L: 7×7×0.75mm-0.35	32Mb pSRAM + 4Mb Nor Flash	3000
SF32LB560UNN26	QFN68L: 7×7×0.75mm-0.35	4Mb Nor Flash	3000

©2026 SiFli Technologies (Nanjing) Co., Ltd. www.sifli.com

Disclaimer and Copyright Notice

SiFli Technologies (Nanjing) Co., Ltd. reserves the right to make corrections, modifications, improvements and other changes to its products and/or to this document at any time without notice, including the information, data, links, URL address and so on.

No license, express or implied, to any intellectual property right is granted by SiFli Technologies (Nanjing) Co., Ltd. herein.

SiFli and the SiFli logo are trademarks of SiFli Technologies (Nanjing) Co., Ltd. All other trademarks, service marks, trade names, product names and logos appearing in this document are the property of their respective owners.

Retail samples and small batches can be purchased directly from the Taobao store (sifli.taobao.com).

For large-volume corporate purchases, please send an email to sales@sifli.com for inquiries.

More products and documents are available on wiki.sifli.com.

For problem discussions, you can visit bbs.sifli.com to join the communication.

For open-source projects applying for free samples, you can join QQ Group 674699679 for communication.

To get the latest product information, please follow our official WeChat account.

Address: 419-13, Block B, Science and Technology Headquarters Building, No.320 Pubin Road, Nanjing Area, Jiangsu Free Trade Zone, P. R. China 200131

Email: sales@sifli.com

©2026 SiFli Technologies (Nanjing) Co., Ltd. All rights are reserved.